NANOMOTION

A Johnson Electric Company

XCD EDGE™

Controller Driver

User Guide

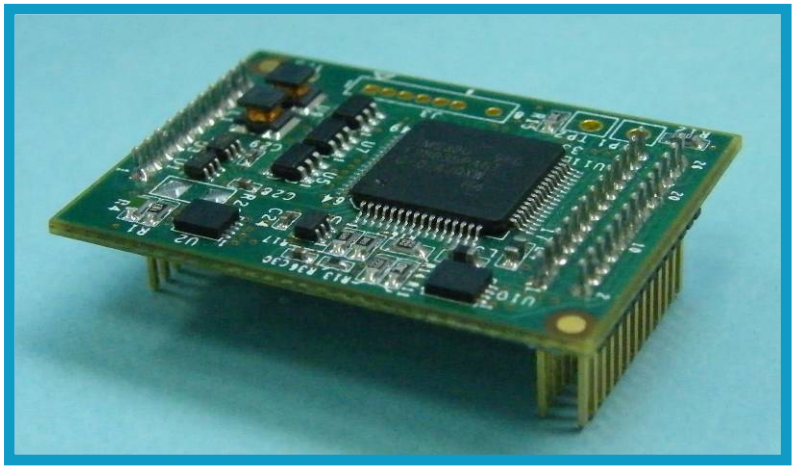

D/N: XCDE458000-00, Revision B **May 23, 2012**

Nanomotion Ltd. POB 623, Yokneam 20692, Israel

Tel: 972-73-2498000 Fax: 972-73-2498099
Web Site: www.nanomotion.com
E-mail: nano@nanomotion.com

Copyright Notice

Copyright © 2011, 2012 by Nanomotion Ltd. All rights reserved worldwide. No part of this publication may be reproduced, modified, transmitted, transcribed, stored in retrieval system, or translated into any human or computer language, in any form or by any means, electronic, mechanical, magnetic, chemical, manual, or otherwise, without the express written permission of Nanomotion Ltd., Mordot HaCarmel Industrial Park, Yokneam, 20692, Israel.

This document contains proprietary information and shall be respected as a proprietary document with permission for review and usage given only to the rightful owner of the equipment to which this document is associated.

Limited Warranty

Nanomotion Ltd. (hereinafter NM) warrants the product (other than software) manufactured by it to be free from defects in material and workmanship for a period of time of one year (except those parts normally considered as consumable/expendable components such as motor conditioning brushes). The warranty commences thirty (30) days from the date of shipment.

NM warrants those parts replaced under warranty for a period equal to the remaining warranty coverage of the original part.

NM's sole and exclusive obligation under this warranty provision shall be to repair, or at its sole option exchange defective products or the relevant part or component, but only if: (i) the Purchaser reports the defect to NM in writing and provides a description of the defective product and complete information about the manner of its discovery within ten (10) days of its discovery; (ii) NM has the opportunity to investigate the reported defect and to determine that the defect arises from faulty material, parts or workmanship; and (iii) the Purchaser returns the affected product to a location designated by NM. These provisions constitute the exclusive remedy of the Purchaser for product defects or any other claim of liability in connection with the purchase or use of NM products.

This warranty policy applies only to NM products purchased directly from NM or from an authorized NM distributor or representative.

This warranty shall not apply to (i) products repaired or altered by anyone other than those authorized by NM; (ii) products subjected to negligence, accidents or damage by circumstances beyond NM control; (iii) product subjected to improper operation or maintenance (i.e. operation not in accordance with NM Installation Manuals and/or instructions) or for use other than the original purpose for which the product was designed to be used.

NM shall not in any event have obligations or liabilities to the Purchaser or any other party for loss of profits, loss of use or incidental, increased cost of operation or delays in operation, special or consequential damages, whether based on contract, tort (including negligence), strict liability, or any other theory or form of action, even if NM has been advised of the possibility thereof, arising out of or in connection with the manufacture, sale, delivery, use, repair or performance of the NM products. Without limiting the generality of the preceding sentence, NM shall not be liable to the Purchaser for personal injury or property damages.

Patent Information

Nanomotion products are covered under one or more of the following registered or applied for patents.

5,453,653; 5,616,980; 5,714,833; 111597; 5,640,063; 6,247,338; 6,244,076; 6,747,391; 6,661,153; 69838991.3; 6,384,515; 7,119,477; 7,075,211; 69932359.5;1186063; 7,211,929; 69941195.5; 1577961; 4813708; 6,879,085; 6,979,936; 7,439,652; 7061158 ;1800356; 1800356; 1800356; 2007-533057 (pending); 2011-093431 (pending); 7,876,509; 10-2007-7009928 (pending); 200780019448.6 ; 7713361.9 (pending); 12/294,926 (pending); GB2008000004178 (pending); GB2009000003796 (pending); 12/398,216 (pending); GB2446428; 12/517,261 (pending); 08702695.1 (pending); 10-2009-7017629 (pending); 12/524,164 (pending); 12/581,194 (pending)

Revision History

Ver/Rev	Date	ECO	Details
00/B	05/23/2012	CO-0433	Deleted reference to specific XCD Software version number. Added patent and trademark information.

Table of Contents

About this Guide **7**

Contact Information **8**

1 Safety **9**

2 Overview **10**

3 XCD EDGE Controller Driver Interfaces **12**

3.1 Functional Interface 12

3.2 Mechanical Interface 13

3.3 Electrical Interface 14

4 Technical Data **18**

5 Ordering Information **18**

About this Guide

Scope

This user guide provides the required information for interfacing with the XCD EDGE Controller Driver.

Intended Users

This user guide is intended for engineers or technicians directly involved in installation, operation and maintenance of positioning systems and control systems.

Reference Documentation

- XCD Software User Manual – use the software version applicable to installed Nanomotion controller.
- XCD EDGE Motherboard User Guide, D/N: XCDE458100
- EDGE Motor User Manual, D/N: MSP4458000 (available on Nanomotion website www.nanomotion.com)

Glossary

D/N	Document Number
FW	Firmware
GPIO	General Purpose Input / Output
I^2C (IIC)	Inter-Integrated Circuit Serial Communication Interface
I/O	Input/Output
MB	Motherboard
NM	Nanomotion
P/N	Part Number
SW	Software Version
XMS	XCD Motion Script

Contact Information

Website: www.nanomotion.com

Customer Service

Contact your local distributor or email Nanomotion Ltd. Technical Support Department at techsupport@nanomotion.com, with detailed problem description, additions, corrections or suggestions.

Nanomotion Ltd. Worldwide Headquarters

Mordot HaCarmel Industrial Park

HaYetsira Street, PO Box 623

Yokneam 20692

Tel: +972-73-249-8000

Fax: +972-73-249-8099

Email: nano@nanomotion.com

Nanomotion Inc - US Headquarters

1 Comac Loop, Suite 14B2

Ronkonkoma

NY 11779
Tel: +1-800-8216266

Fax: +1-631-5851947

Email: nanoUS@nanomotion.com

1 Safety

WARNING!

- Keep your hands off the XCD EDGE Controller Driver while the it is turned on.

  Approaching your fingers to the XCD EDGE Controller Driver, may result in an electrical shock.

CAUTION:

Use the XCD EDGE Controller Driver only for the purposes and tasks described in this manual, or in related documentation.

Always perform tasks according to the instructions provided in the documentation.

2 Overview

The XCD EDGE™ Controller Driver is a controller and driver for Nanomotion EDGE motor. This single-axis, compact motion controller operates in linear driving mode.

The XCD EDGE is an open frame controller driver and it can be installed as piggy back on a motherboard.

The controller driver provides positioning control for one axis, with configurable motion profile and servo parameters.

The XCD EDGE Controller Driver supports user programming, using a Nanomotion proprietary XCD Motion Script (XMS).

With the XMS script, the user can define a complex sequence of motions along with sophisticated calculations and execution control. The user can store a preprogrammed XMS program in the controller's flash memory, and execute it at power up.

XCD EDGE Controller Driver Features

- Power supply +5V
- Supports I^2C, UART, and SPI communication protocols
- Supports user-programming, using XMS
- 2 Limit Switches
- 4 GPIO lines
- 3 Anlog inputs
- Emergency Stop input signal

The XCD EDGE Controller Driver Connections Diagram

The diagram describes the XCD EDGE Controller Driver connected to the XCD Motheboard. The XCD Motherboard is designed for XCD EDGE Controller Driver evaluation and development purposes.

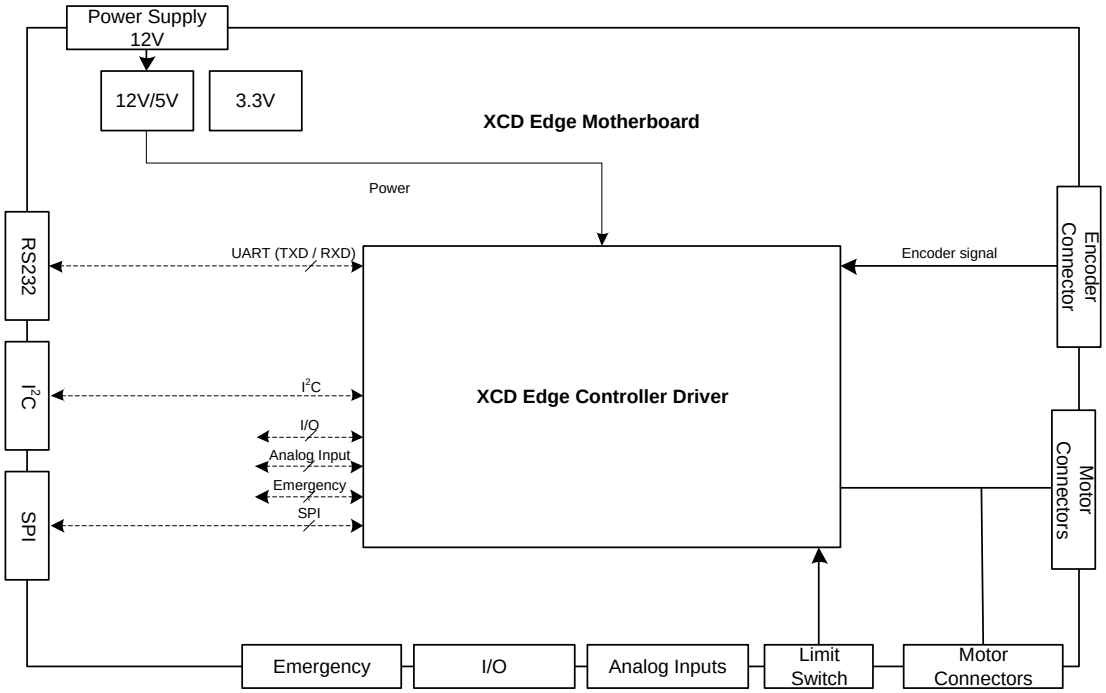

3 XCD EDGE Controller Driver Interfaces

This section provides the required information for interfacing with the XCD EDGE Controller Driver.

3.1 Functional Interface

Controlling the EDGE Motor through the XCD EDGE Controller Driver, using the XCD EDGE Motherboard.

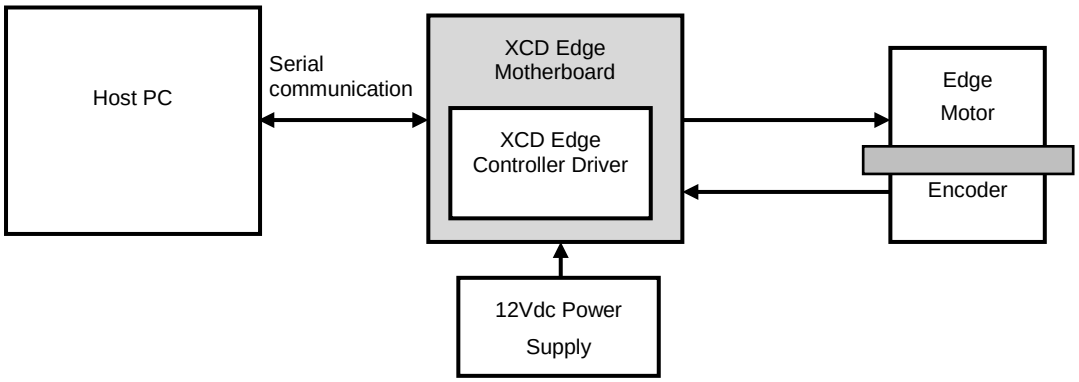

Operating the EDGE motor requires a setup consisting of the following components:

1. A Host PC, running the XCD Commander application, SW version 1.0. This SW is developed especially for evaluation and development purposes.
2. An XCD EDGE Motherboard: either the XCD EDGE Motherboard, P/N: XCDE150100-XX or a user-customized motherboard, that meets the inerface requirements, as specified in section 3.
3. The XCD EDGE Controller Driver, FW version 1.1.0.4.
4. A single axis NM stage (or user-customized power stage) with mounted EDGE motor.
5. A 12VDC power supply.

3.2 Mechanical Interface

XCD EDGE Controller Driver Card - Side View

(all dimensions in are mm)

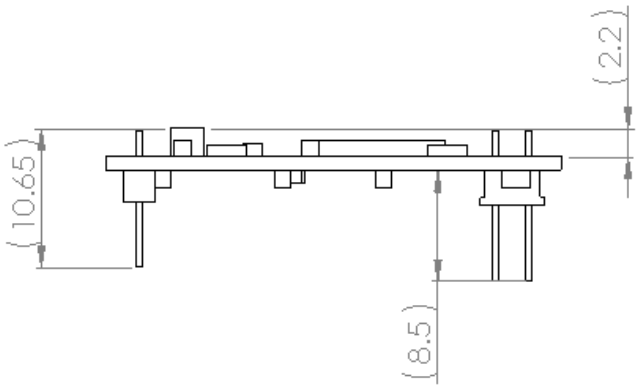

XCD EDGE Controller Driver Card - Top View

(all dimensions in are mm)

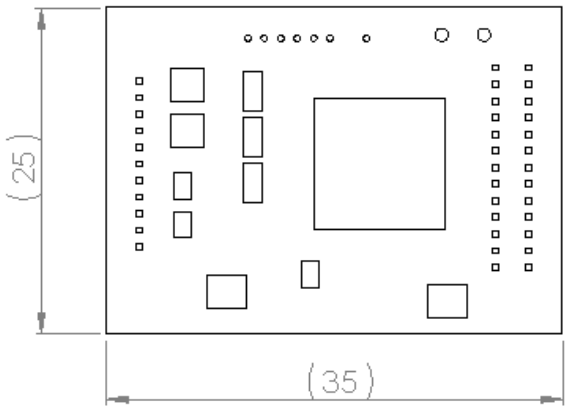

3.3 Electrical Interface

XCD EDGE Controller Driver Card – Top View

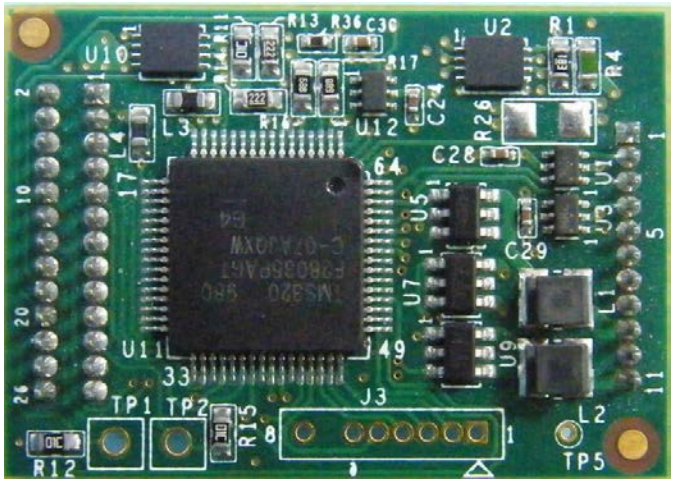

XCD EDGE Controller Driver Card – Bottom View

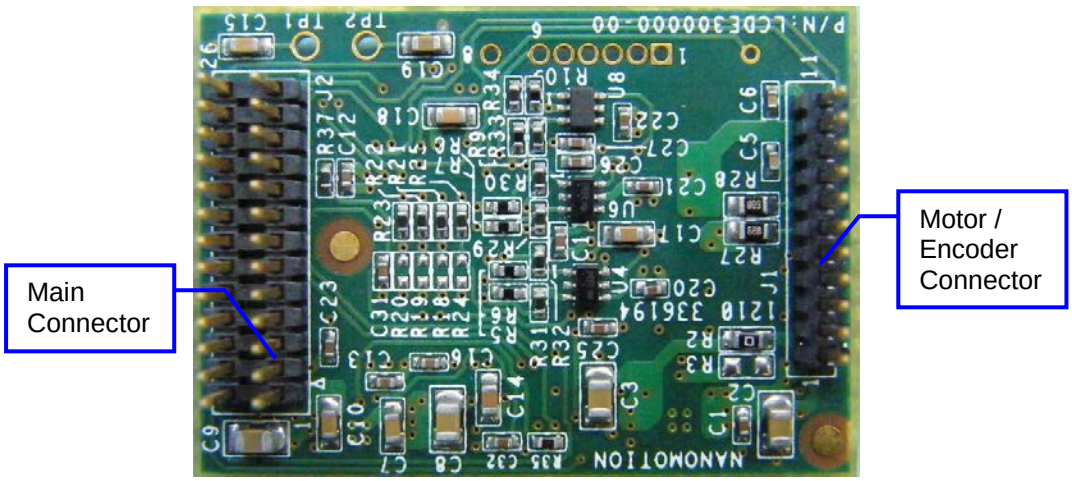

Main Connector

Connector type on board: Samtec header, P/N: TMS-113-01-L-D-RA .

Mating connector: Samtec micro socket, P/N: SMS-113-01-X-D or P/N: RSM-113-02-L-D-X.

Pin #	Pin Name	In/Out	Function	Comments
1	+5V	Power	5Vdc Power Input	Max power consumption 2W
2	+5V	Power	5Vdc Power Input	Max power consumption 2W
3	SPI_CLK	Input	SPI Clock	Future option
4	SPI_EN	Input	SPI Enable	
5	MISO	Input	Master In Slave Out	
6	MOSI	Output	Master Out Slave In	
7	N.C.	N.C.	Not connected	
8	N.C.	N.C.	Not connected	
9	RXD	Input	RS232 Receive	The controller receives commands from the host and sends back the replies
10	TXD	Output	RS232 Transmit	
11	SDA	Bidirectional	I^2C Serial data	The controller receives commands from the host and sends back the replies
12	SCL	Bidirectional	I^2C Serial clock	
13	GPIO1	Output	PPW	Voltage level CMOS 3.3V. The customer defines I/O processing in XMS
14	GPIO2	N.C.	Not connected	
15	GPIO3	Output	General Purpose Digital Output 3	
16	GPIO4	Ouput	General Purpose Digital Output 4	
17	AN2	Input	Analog Input 1	V range: 0V÷3.3V. The customer defines input processing in XMS
18	AN1	Input	Analog Input 2	
19	EMERGENCY	Input	Emergency stop	CMOS 3.3V V range: 0V÷3.3V

Table 1: Main Connector Pinout

Pin #	Pin Name	In/Out	Function	Comments
20	AN3	Input	Analog Input 3	V range: 0V÷3.3V The customer defines input processing in XMS script
21	ANLG_OUT2	Output	Analog Ouput 2	
22	ANLG_OUT1	Output	Analog Ouput 1	
23	N.C.	N.C.	Not connected	
24	PWM_OUT	Output	Keep alive	For testing puposes
25	GND	Ground	System Ground	
26	GND	Ground	System Ground	

Table 2: Main Connector Pinout (Cont.)

Motor / Encoder Connector

Connector type on board: Samtec header, P/N: TMS-111-01-L-S-RA.

Mating connector: Samtec micro socket, P/N: RSM-111-02-L-S-X or P/N: SMS-111-01-X-S

Table 3: Motor / Encoder Connector Pinout

Pin #	Pin Name	Input / Output	Description
1	ENCDR_PWR	Power	Encoder power out
2	A_5V	Input	Incremental signal
3	B_5V	Input	Incremental signal
4	INDEX_5V	Input	Reference mark
5	GND	Ground	System ground
6	LIMIT_SW_RIGHT	Input	Limit switch Right
7	LIMIT_SW_LEFT	Input	Limit switch Left
8	GND	Ground	System ground
9	P1	Output	Motor phase 1
10	COM	Output	Motor common
11	P2	Output	Motor phase 2

4 Technical Data

Dimensions:

35mm x 25mm x 10.65mm

Electrical:

Input power supply voltage: 5Vdc ±5%.

Maximum power consumption: 2W

Operating Temperature:

0ºC to +70ºC

Storage Temperature:

-40ºC to +50ºC

5 Ordering Information

Part Description	Part Number
XCD EDGE Controller Driver	XCD-EDGE-BD-XX