The ST Series Piezoelectric Motor is the smallest motor of its kind. The ST provides high resolution motion control for linear or rotary devices in a fraction of the space of traditional mechanisms. The ST is ideal for small stepping as well as continuous travel, with the ability to make step increments in the tens of nanometers and the ability to operate at speeds up to 250mm/sec.

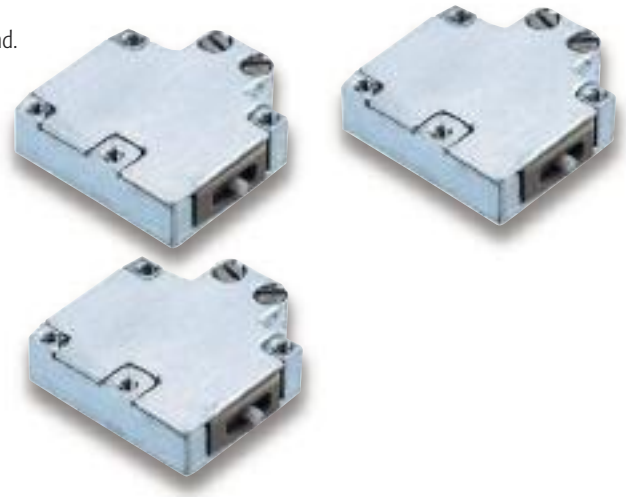

Features

- The smallest standard Piezo-Electric package
- Unlimited travel
- Wide dynamic velocity range– from 1µm/sec to 250mm/sec
- Excellent move & settle
- Standard and low speed version for high resolution
- No intrinsic magnetic field
- No external magnetic field sensitivity

Dimensions (European View)

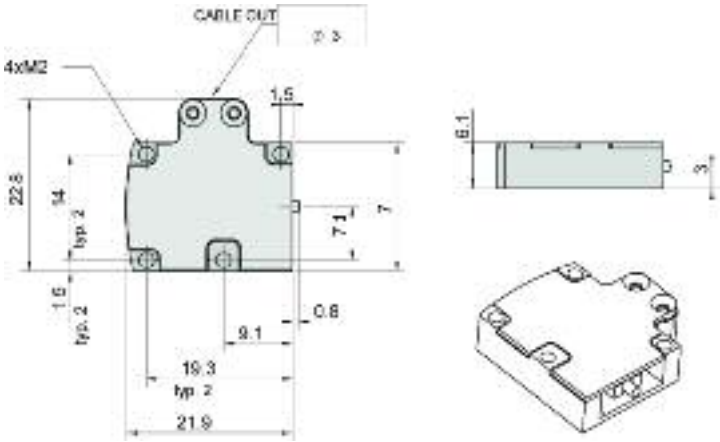

Motor Performance Specifications

	max velocity (mm/sec)	dynamic stall force (N)	static hold force (N)	static stiffness (N/µ)	preload on stage (N)	Kf force constant (N/Volt Commanded)
ST-1-S	250	1.2	1	.15	8	.1
ST-1-V	250	1.2	1	.15	8	.1

Note: All Dimensions are in mm.

Environmental

Operating temperature:	0 to 50˚C
Storage:	-40˚C to +70˚C
Humidity:	0 to 80%, non condensing