NANOMOTION

A Johnson Electric Company

AB5 and AB51 Drivers

User Manual

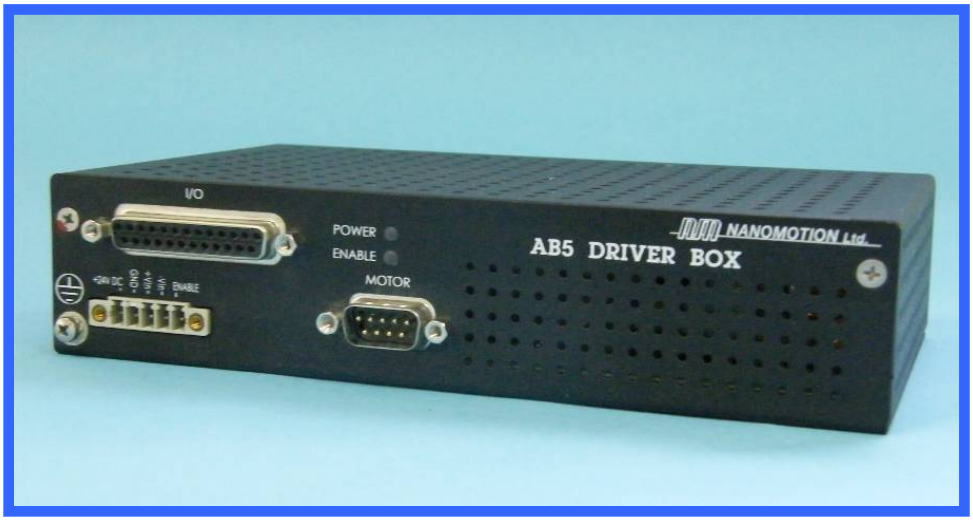

D/N: AB05458200-02 rev B

April 2015

Nanomotion Ltd. POB 623, Yokneam 20692, Israel

Tel: 972-73-2498000 Fax: 972-73-2498099
Web Site: www.nanomotion.com
E-mail: nano@nanomotion.com

Copyright

This document contains proprietary information of Nanomotion Ltd., and Nanomotion Inc., and may not be reproduced in any form without prior written consent from Nanomotion Ltd. and Nanomotion Inc.

No part of this document may be reproduced, translated, stored in a retrieval system or transmitted in any form and by any means, electronic, mechanical, photographic, photocopying, recording, or otherwise, without the written permission of Nanomotion Ltd.

Information provided in this document is subject to change without notice and does not represent a commitment on the part of Nanomotion Ltd.

Copyright 2004-2012, Yokneam, Israel. All rights reserved.

All products and company names are trademarks or registered trademarks of their respective holders.

Limited Warranty

Nanomotion Ltd. (hereinafter NM) warrants the product (other than software) manufactured by it to be free from defects in material and workmanship for a period of time of one year (except those parts normally considered as consumable/expendable components such as motor conditioning brushes). The warranty commences thirty (30) days from the date of shipment.

NM warrants those parts replaced under warranty for a period equal to the remaining warranty coverage of the original part.

NM's sole and exclusive obligation under this warranty provision shall be to repair, or at its sole option exchange defective products or the relevant part or component, but only if: (i) the Purchaser reports the defect to NM in writing and provides a description of the defective product and complete information about the manner of its discovery within ten (10) days of its discovery; (ii) NM has the opportunity to investigate the reported defect and to determine that the defect arises from faulty material, parts or workmanship; and (iii) the Purchaser returns the affected product to a location designated by NM. These provisions constitute the exclusive remedy of the Purchaser for product defects or any other claim of liability in connection with the purchase or use of NM products.

This warranty policy applies only to NM products purchased directly from NM or from an authorized NM distributor or representative.

This warranty shall not apply to (i) products repaired or altered by anyone other than those authorized by NM; (ii) products subjected to negligence, accidents or damage by circumstances beyond NM control; (iii) product subjected to improper operation or maintenance (i.e. operation not in accordance with NM Installation Manuals and/or instructions) or for use other than the original purpose for which the product was designed to be used.

NM shall not in any event have obligations or liabilities to the Purchaser or any other party for loss of profits, loss of use or incidental, increased cost of operation or delays in operation, special or consequential damages, whether based on contract, tort (including negligence), strict liability, or any other theory or form of action, even if NM has been advised of the possibility thereof, arising out of or in connection with the manufacture, sale, delivery, use, repair or performance of the NM products. Without limiting the generality of the preceding sentence, NM shall not be liable to the Purchaser for personal injury or property damages.

Patent Information

Nanomotion products are covered under one or more of the following registered or applied for patents.

5,453,653; 5,616,980; 5,714,833; 111597; 5,640,063; 6,247,338; 6,244,076; 6,747,391; 6,661,153; 69838991.3; 6,384,515; 7,119,477; 7,075,211; 69932359.5;1186063; 7,211,929; 69941195.5; 1577961; 4813708; 6,879,085; 6,979,936; 7,439,652; 7061158 ;1800356; 1800356; 1800356; 2007-533057 (pending); 2011-093431 (pending); 7,876,509; 10-2007-7009928 (pending); 200780019448.6 ; 7713361.9 (pending); 12/294,926 (pending); GB2008000004178

(pending); GB2009000003796 (pending); 12/398,216 (pending); GB2446428; 12/517,261 (pending); 08702695.1 (pending); 10-2009-7017629 (pending); 12/524,164 (pending); 12/581,194 (pending)

Revision History

ECO	Revision	Release date	Details
	00/A	Oct. 2005	New release
	00/B	June 2007	Document update
	00/C	July 2007	Added T.P. feature
	01/A	Aug. 2008	Document update
	02/A	Feb 2011	Updated EOP tables, graphs, examples, T.P. schemes, T.P. content
NA	NA	Aug. 2012	Administrative change – added patent information section in front matter.
0863	02/B	April 2015	Added max motor output voltage to environmental list on page 27

CE Compliance

This product was tested for Electrical Safety and Electromagnetic Compatibility.

It conforms with EMC Directive 89/336/EEC, Article 7(1); with FCC 47 CFR part 15 subpart B; and with LV directive 73/23/EC, Article 5 and satisfies the requirements of the following standards:

- EN 61800-3:1996 + A11: 2000 for second environment.
- EN 61000-3-2:2000, EN 61000-3-3:1995 + A1: 2001.
- FCC 47 CFR: 2002 part 15, subpart B.
- EN 61010 – 1:2001.

This page is left blank intentionally.

Table of Contents

1 INTRODUCTION 12

1.1 General 12

1.2 Main Features 13

1.3 AB5 Operating Principle 14

2 CONNECTING THE AB5/AB51 DRIVER 15

2.1 Quick Instructions for Connecting the Driver 15

2.1.1 Wires and Connectors 16

2.1.2 Motion Control Interfaces 16

2.1.3 Motor Cable Connections 20

2.2 Before Operating the Motor 21

3 AB5/AB51 OPERATING 22

3.1 Operation Modes 22

3.1.1 Velocity Mode Operation 22

3.1.2 Step Mode Operation 22

3.1.3 Brake_On Mode 23

3.2 Set_Offset Procedure 23

3.2.1 Description 23

3.2.2 Setting the Offset 24

4 MOTOR CONDITIONING USING THE AB5/AB51 DRIVER 25

4.1 Introduction 25

4.2 The Conditioning Procedure 25

5 TECHNICAL DATA 27

5.1 Specifications 27

5.2 Thermal Envelope of Performance (EOP) 28

5.2.1 Description 28

5.2.2 Stage Heat Dissipation Consideration 29
5.2.3 EOP for HR Motors Driven by AB5, AB51 Drivers 29
5.3 TP (Thermal Protection) 33
5.3.1 Description 33
5.3.2 TP Configurations 34
5.3.3 Benefits of Thermal Protection 35
5.3.4 The TP Feature Implementation 36
5.3.5 How It Works 38
5.4 Front Panel Connectors and Indicators 40
5.4.1 Front Panel Description 40
5.4.2 LED Indicators 40
5.4.3 Control Terminal Block Pinout 41
5.4.4 Motor Output Port Pinout 41
5.4.5 I/O Port Connector Pinout 42
5.5 I/Os 43
5.5.1 Opto-isolated Inputs 43
5.5.2 Voltage Source Configuration 44
5.5.3 Fault Output 45
5.6 AB5/AB51 Layout 46

6 PART NUMBERING METHODOLOGY 47

7 CONTACT INFORMATION 48
7.1 Customer Service 48
7.2 General Inquiries and Ordering 48

List of Figures

Figure 1: AB5 Driver Box 12
Figure 2: AB5 Driver Front Panel 15
Figure 3: Differential Analog Input Connection 17
Figure 4: Single-ended (non-differential) Analog Input Connection 18
Figure 5: Joystick Connection 19
Figure 6: Velocity vs. Command Using the AB5/AB51 Driver 30
Figure 7: Force vs. Velocity Using the AB5/AB51 Driver at the Various Work Regimes (a-h) 31
Figure 8: TP Mechanism Block Diagram 36
Figure 9: DIP Switch Location inside the AB5/AB51 Driver Box 36
Figure 10: DIP Switch Position Map 37
Figure 11: Thermal Protection Sequence 39
Figure 12: Opto-Isolated Input Interface 43
Figure 13: Jumper 2 Configuration 44
Figure 14: Layout and Mechanical Dimensions 46

List of Tables

Table 1: Front Panel Connectors 16
Table 2: AB5/AB51 Driver Specifications 27
Table 3: EOP Table for HR Motors Driven by AB5 (Standard LUT) 31
Table 4: EOP Table for HR Motors Driven by the AB51 Driver (Reduced LUT). 32
Table 5 : Front Panel LED Indicators 40
Table 6: Control Terminal Block Pinout 41
Table 7: Motor Output Port Pinout 41
Table 8: I/O Port Connector Pinout 42

List of Abbreviations

A	Ampere
AC	Alternating Current
DC	Direct Current
LED	Light Emitting Diode
mA	milli Ampere
mW	milli Watt
PWM	Pulse Width Modulation
TTL	Transistor-Transistor Logic
Vrms	Volts Root Mean Square
DIP	Dual-In-line Package

1 Introduction

This manual is designed to help the reader to operate the AB5/AB51 driver. It assumes that the reader has a fundamental understanding of basic servo systems, as well as motion control concepts and applicable safety procedures.

1.1 General

The AB5 is a single axis amplifier box for driving Nanomotion Piezo-Ceramic motors. The AB5 amplifier box interfaces between the input command from a controller or joystick to the motor and drives the Piezo motor. It facilitates a linear response of the motor and eliminates the “dead zone”, previously associated with Piezo-Ceramic motor operation.

The AB5 amplifier box consists of three main cards. The Logic and Driver cards are common to all AB5 configurations, while the Personality card is configuration specific and can be replaced by an authorized technician, to drive a different motor (in the HR family).

Figure ***1***: AB5 Driver Box

An additional, related model is the AB51 driver, built identically to the AB5 but carrying a different firmware. The AB51 is designed to have a minimal controlled Dead Zone, which is beneficial in Z applications or in repetitive Start/Stop mode of operation. The AB51 feeds less driving power into the motor at low commands, thus facilitating the controlled Dead Zone, mentioned above, while maintaining the motor at a lower operating temperature. The AB51 driver should be chosen in general applications, unless a perfect servo tracking or very low ripple constant velocity is needed, where AB5 is preferable.

1.2 Main Features

- High precision (11 bits) control of the output power stage.
- Zero Dead Band in AB5 and minimal Dead Band in AB51.
- Drives up to four HR8 motors.
- Four operation modes: Velocity, Step, and Brake On/Off.
- Interface to an analog command.
- Modular design, to allow replacement of configuration specific Personality cards.
- Discrete inputs enabling feedback from external sources, such as: limit switches, Emergency_Stop command, etc.
- Three color LED indicators.
- Over Current, Over Voltage, and motor interlock protections.
- Minimized sensitivity to cable length.
- User defined Enable input logic.
- Thermal Protection mechanism

1.3 AB5 Operating Principle

The force transfer of the Nanomotion motor is based on friction of the motor's elements and the drive strip. This drive mechanism has many advantages, like high precision, zero backlash, inherent brake and more. Nevertheless, it poses a control challenge at low command due to non linearity, an effect known in Nanomotion User Manuals, as the "Dead Zone".

The AB5 driver is designed to eliminate the Dead Zone and to facilitate a linear response from 0 (zero) command level. This design allows easily controlling the driver by off-the-shelf servo controllers.

The linear response is achieved by the dual excitation of the up/down direction of the motor. The difference between the excitations determines the direction and velocity of the motion. When the up and down directions are activated with equal excitation, the stage does not move and the effect is of reduced friction. By gradually increasing the difference between the up and down excitations, the motor begins driving the stage smoothly and continuously. Increasing the difference will increase the velocity. Thus a linear response is achieved with no apparent "Dead Zone".

The linear feature is achieved by an effective higher excitation of the motor, causing a higher operating temperature. The higher temperature is permitted as long as the user adheres to the stiffness requirements and the EOP outlined in section 5.2 in this manual.

WARNING!

To prevent minor electric shock hazard, the ground screw, located on the bottom left of the front panel, must be connected to the infrastructure earth.

2 Connecting the AB5/AB51 Driver

For connecting the driver to the system, refer to Figure 3: Differential Analog Input Connection or Figure 4: Single-ended (non-differential)
Analog Input Connection.

2.1 Quick Instructions for Connecting the Driver

For connections refer to Figure 2, below.

Figure 2: AB5 Driver Front Panel

1. Connect motor's cable (for details refer to section 2.1.3) to driver's Motor connector (refer to Table 1).
2. Connect the 25 pins flat cable to driver's I/O port connector (for details refer to section 2.1.1) for analog or Joystick connection (for details refer to section 2.1.2).
3. Connect the power supply wires to driver's Terminal block (for details refer to section 2.1.1).
4. Plug in the terminal cable to the driver's mating connector.
5. Read the instructions in section 2.2 before operating the motor.
6. Turn the power on and continue to Chapter 3 for Driver Operation.

2.1.1 Wires and Connectors

- **Power supply:** use 22 AWG (or lower AWG) wires for the power supply. For noisy surroundings, it is recommended to twist the ground line and the power line together.
- **Analog command:** a twisted shielded cable is recommended.
- **Discrete inputs:** these signals are not sensitive to noise and can be grouped together in the same harness with any of the other groups.

Connector	Description
Control terminal	5 pin connector. Receives +24V from an external source and provides direct control over the motor ENABLE signal and the analog control signal (+Vin and/or -Vin). (Mating connector is by Wieland, P/N 25.621.0553.0). See Table 6 for connector pinout.
I/O Port Connector	25 pins D-type female connector. Interfaces to the control source (joystick or controller). See Table 8 for connector pinout.
Motor Output Port	9 pins D-type male connector. Interfaces to the motor. See Table 7 for connector pinout.

Table 1: Front Panel Connectors

2.1.2 Motion Control Interfaces

The AB5/AB51 driver can receive the input signals either from a motion controller or from a joystick. The schematic diagrams of the motion controller and joystick connections to the AB5/AB51 driver are provided in following sections.

Note:

- *The motor may be operated from the Terminal block using the following signals: +24V, GND, +Vin, -Vin, Enable.*

2.1.2.1 Analog Controller Connection

There are two options of an analog connection of a motion controller to the AB5/AB51 driver:

- Differential connection (see Figure 3)
- Single-Ended (Non-differential) Connection (see Figure 4)

The differential connection enhances noise immunity.

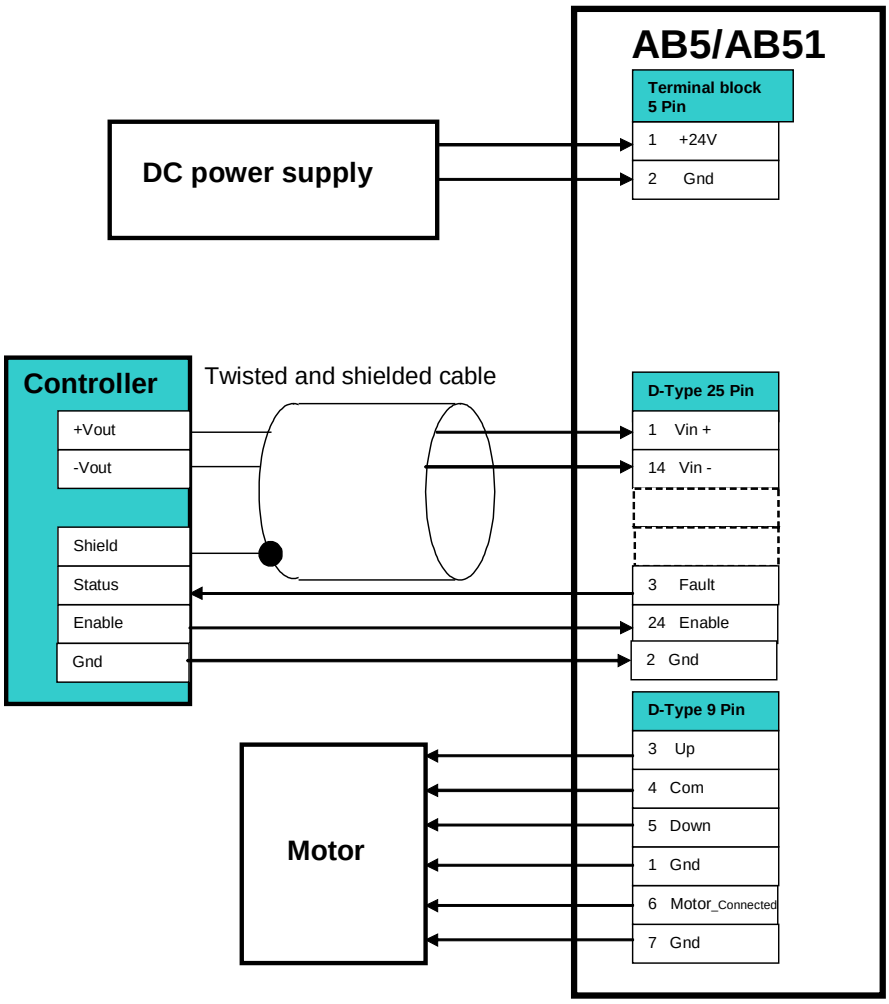

Figure 3: Differential Analog Input Connection

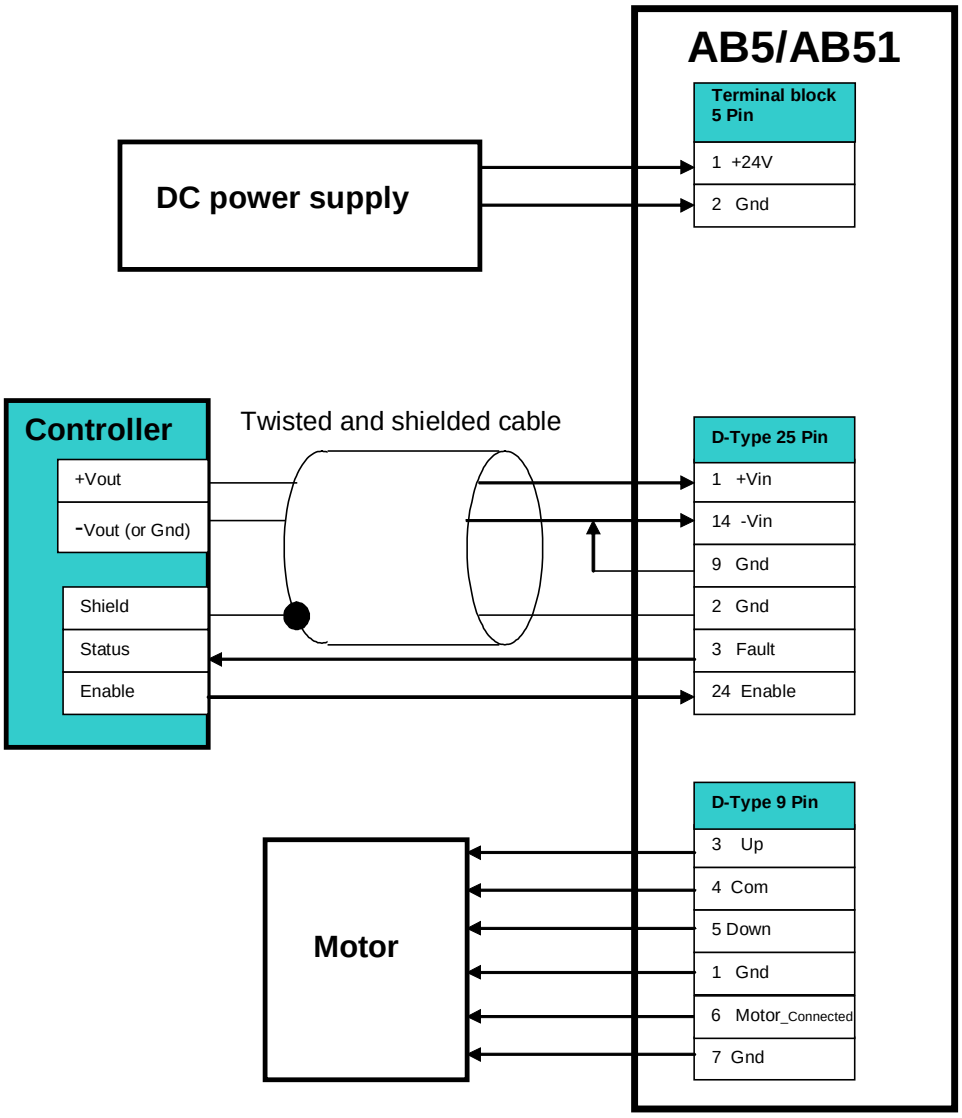

Figure 4: Single-ended (non-differential) Analog Input Connection.

2.1.2.2 Joystick Connection

Using the joystick for supplying the command voltage to the AB5/AB51 driver allows the user to manually drive the motor without using a motion controller.

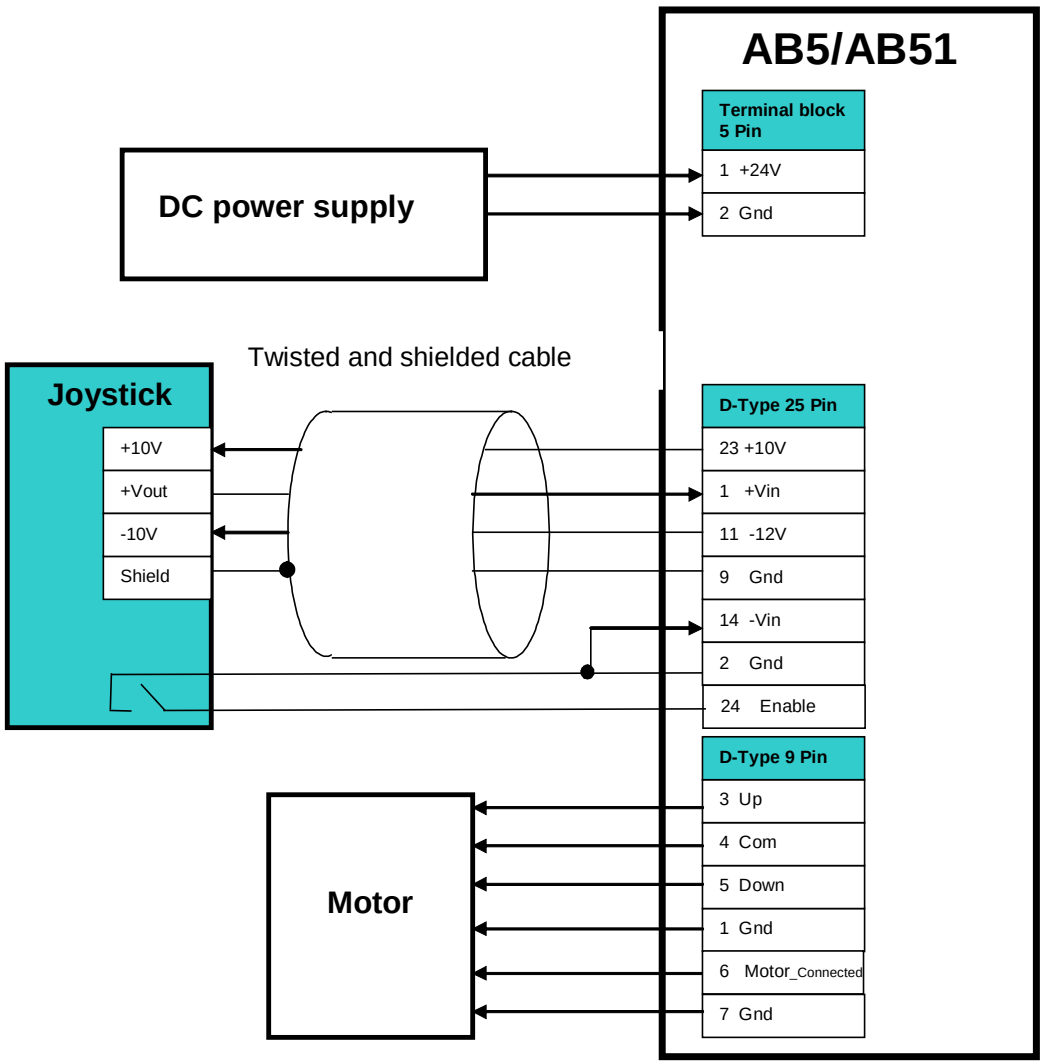

Figure 5: Joystick Connection

2.1.3 Motor Cable Connections

Nanomotion guarantees proper driver and motor performance only when Nanomotion standard cables are used.

- The Motor_Connected interlock is available on motor connector, (see Table 7). It disables high voltage on the bare driver output connector, when the motor is not connected.
- If more than one motor is connected to the AB5/AB51, use a suitable branch cable. Branching is possible for two and four identical motors. Versions are available for motors operating either side by side or head to head.
- The allowed maximum total motor cable length (connecting the AB5/AB51 driver to the motor/s) is up to 10 meters for the HR or ST motor types and up to 20 meters for the vacuum motors. Branch cables must be of an identical length. Their total length should not exceed the allowed total cable length.

2.2 Before Operating the Motor

Before operating the AB5/AB51, verify the following:

- All motors are properly mounted and preloaded.
- Jumper JP2 is set to the required mode of operation (accessible only by an authorized service technician, see section 5.5.2 for more details).
- Mechanical screws lock all connectors.
- The external power supply is capable of supplying the required power consumption of the AB5/AB51 (see Table 7).
- There is no command when turning the power on.

WARNING !

The driver must be grounded to infrastructure earth before operating.

CAUTION:

The command should be limited according to the motor EOP, see section 5.2).

3 AB5/AB51 Operating

3.1 Operation Modes

Both Enable and Motor_Connected inputs must be active for operation, regardless of the operation mode.

The AB5/AB51 can be operated in one of the three operation modes listed below:

- **Velocity (AC) Mode:** the motor is driven continuously.
- **Step Mode:** the driver output is Hardware turned off and on, in predefined intervals of 1/16 sec every 1/2 sec, thus driving the motor in discrete steps.
- **Brake_On Mode:** while in Velocity Mode, turns on the holding force.

3.1.1 Velocity Mode Operation

In this operation mode, the motor is driven continuously by applying the analog command voltage (± 10 V) using a relevant interface device (joystick or motion controller).

This mode is driver's default operation mode.

3.1.2 Step Mode Operation

In this operation mode, the driver output to the motor is turned on and off for fixed time intervals, defined in the hardware, as follows:

- ON phase - 1/16 second
- OFF phase - 0.5 second

The amplitude of the output corresponds to the analog command input value and thus determines the speed of the motor.

To enable the Step Mode: short pin 16 (of the I/O port connector) to ground (refer to ***Table*** 8).

3.1.3 Brake_On Mode

In Break_On Mode the driver disconnects the power supply from the motor, however the servo is still active. In this mode, the motor is turned off, it consumes no power.

To enable the Brake_On Mode: Set pin 17 (of the I/O port connector) to low level (short to ground refer to Table 8). When in Break_On Mode the motor is disabled. To run the motor, set the Brake_Off Mode by setting pin 17 to high level (disconnect).

Note:

- *The combination of Brake_On Mode while the driver is Enabled poses a conflict on the servo and a transient could occur upon returning to the Brake_Off Mode.*

3.2 Set_Offset Procedure

3.2.1 Description

When working with AB5 driver in Brake_Off Mode (see section 3.1.3) and the motor is enabled, the Offset procedure prevents motor's drifting due to system's asymmetry. It generates an internal offset command at a "0 command" from the controller.

The Set_Offset procedure is executed to calibrate the "0 command" in the following cases:

- For a new motor / system – before first time operation.
- For motor which was dismounted from the system, and mounted again.

3.2.2 Setting the Offset

1. Disable and then Enable the driver before starting the adjustment.
2. Apply the "0 command" and observe if the slide moves.
3. Adjust the command voltage level until the slide movement stops.
4. While still applying the command level, short pin 19 (of the I/O port connector) to ground momentarily (refer to Table 8). The driver “remembers” this level of command as its “0” (max 2.5V).
5. Apply "0 command" level and verify that the slide is motionless.

4 Motor Conditioning Using the AB5/AB51 Driver

4.1 Introduction

Conditioning of any Nanomotion motor before functional operation is an important action. It stabilizes dynamic performance, reduces wear rate and increases the lifetime of the system.

The AB5/AB51 driver is unique in its mode of operation, comparing to other Nanomotion drivers. It allows a full linear response starting with very low commands. In order to do so, the AB5/AB51, when enabled, energizes the motor even at 0 (zero) command. Consequently, the AB5/AB51 may cause the motor to overheat, especially during the initial phase of conditioning. This chapter instructs the user on how to safely condition Nanomotion motors when using the AB5/AB51 driver.

4.2 The Conditioning Procedure

IMPORTANT:

The conditioning of all Nanomotion motors must be performed after initial assembly and before motor tuning. In addition, the conditioning should be performed any time a motor has been dismounted and remounted, or its pre-load released.

CAUTION:

Limit the command to 5V and use the "Abort on Position Error" option of the controller in order to protect the motor during initial integration and conditioning.

Do not perform the conditioning procedure in vacuum environment. This procedure must be performed in ambient air conditions only.

To perform the conditioning procedure, follow the steps below:

1. Set the conditioning procedure to cover the whole expected operated travel of the Ceramic Driving Strip.
2. Run the stage repetitively from end to end in closed-loop.
3. Profile: Velocity - 100 mm/sec; acceleration / Deceleration =0.1 to 1m/s$^{2.}$
4. The AB5/AB51 should be disabled during the dwell time.
5. Duty cycle - 25%. This means that the dwell time (AB5/AB51 disabled) should be three times longer than the move time (AB5/AB51 enabled).
6. Conditioning duration :
   - 8 hours for all HR and ST series motors.
   - 16 hours for all DuraMotor series motors.
   - 18 to 20 hours for applications which use Ceramic Coated Strips (CCS).
7. Wipe the Ceramic driving Strip surface with IPA (analytically pure grade isopropyl alcohol), without retracting the motor's fingers, approximately one hour into the conditioning process.
8. At the end of the conditioning procedure, wipe the drive strip with IPA without retracting the motor's fingers.
9. Run the motor for 10 min as IPA may leave some residual hydro carbons on the surface that affects performance.
10. The motor is now ready for operation.

5 Technical Data

5.1 Specifications

Electrical Specifications		
Power Input	+24 VDC ±5% (stabilized)	
Power Consumption w/o Load	2.4W	
Power out under load	275Vrms maximum	
Current consumption based on Load (E1 = one element; E32=32 elements)	**Number of elements**	
	No load	100ma
	E1 to E4	1A
	E8	2A
	E16	4A
	E32	8A
Physical Properties		
Weight	450g	
Environmental Conditions		
Operating Temperature	0°C to 50°C	
Storage Temperature	-40°C to 70°C	
Analog Input Specifications		
Input voltage range	±10V	
Input impedance	10kΩ	
Input low pass filter	2.7 kHz	

Table 2: AB5/AB51 Driver Specifications

5.2 Thermal Envelope of Performance (EOP)

5.2.1 Description

Motor operating temperature is a result of the balance between heat generation and heat dissipation.

- The heat generation depends on motor's work regime (driver command level).
- The heat is dissipated through the following heat transfer mechanisms: conduction, radiation and convection (the convection mechanism is negligible in vacuum environment).

The heat dissipation mechanisms should be able to dissipate the heat generated in order to avoid overheating. The EOP gives the user the tools to assess the permitted operating conditions (for set ambient temperature and command, deriving the duty cycle and maximal continuous operation that assures safe operation).

The user can either operate the motor for an extended period of time at a specific duty cycle or alternatively, can operate the motor for a continuous time period specified under “Maximal Continuous Operation Time” (see graphs and tables in section 5.2.3). After the continuous operation is completed, the driver must be disabled to cool down the motor for 400 sec in air and for 700 sec in vacuum environment.

Notes:

- *The duty cycle is the ratio of the operation time and the total work cycle (operation time + idle time).*
- *When operating the motor with the AB5/AB51 driver continuously in Brake_Off Mode (refer to section 5.2.3 "EOP for HR Motors Driven by AB5, AB51 Driver"), the motor consumes power at all times, even when the control command voltage is "0" (zero) thus the time at "0" command is accounted in the heating process and reduces the thermal EOP.*
- *Upon operating a motion system in vacuum, it is expected that the Coefficient of Friction of the bearing structure will increase. This may require changing the system operation point on the thermal EOP curves.*

5.2.2 Stage Heat Dissipation Consideration

The motor heat dissipation mechanism is by convection and radiation to the motor case, and by conduction through motor's 'finger tips'. Hence, the motor and the Ceramic Driving Strip bases, must both be thermally designed to dissipate 2W each (per motor's 'finger tip'), with maximum temperature rise of 15°C.

5.2.3 EOP for HR Motors Driven by AB5, AB51 Drivers

The AB5, AB51 drivers are preferable for a perfect servo tracking and/or very low ripple constant velocity. Refer to the "AB5 and AB51 Drivers User Manual", D/N: AB05458200. The AB5 unique features result in the motor consuming more power and in a lower EOP, compared to the EOP for a motor operating with the AB1A driver.
The AB51 driver is a modified version of the AB5 driver, which gives a higher EOP, compared to the AB5 driver, with some adverse effect on control performance in respect to tracking error and low velocity ripple.

Figure 6 illustrates motor velocity as a function of the applied AB5/AB51 driver command voltage. Allowing up to 30 mm/sec variations, use it as a reference and as a guideline for expected motor performance:

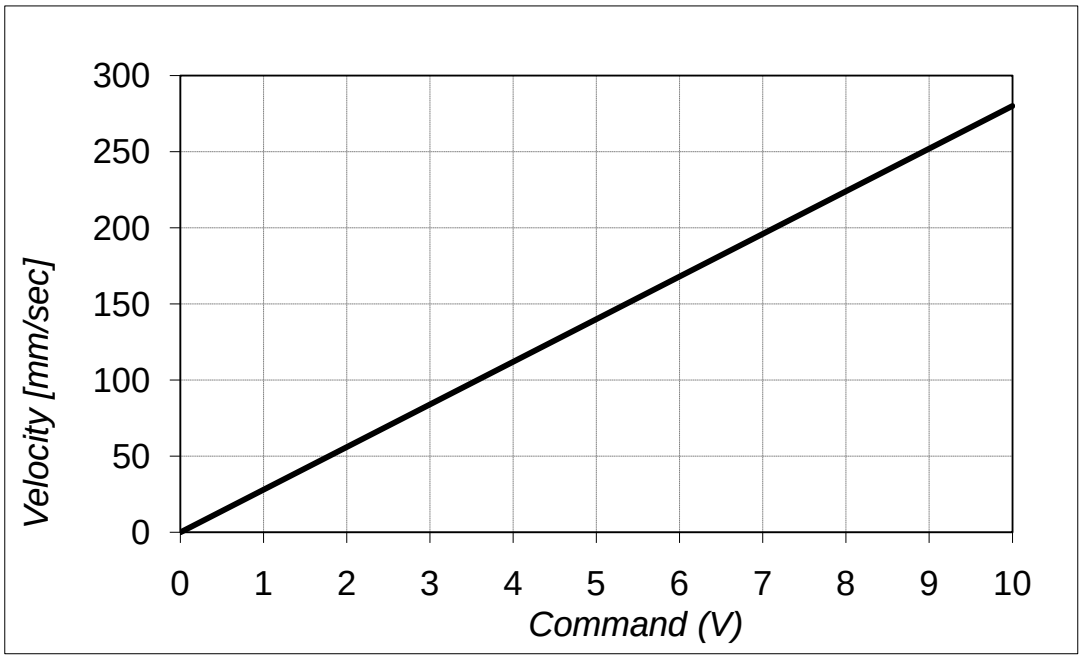

Figure 6: Velocity vs. Command Using the AB5/AB51 Driver

Figure 7 and Table 3 are designed to help the user determining the correct envelope of performance and avoid overheating and damaging the motor.

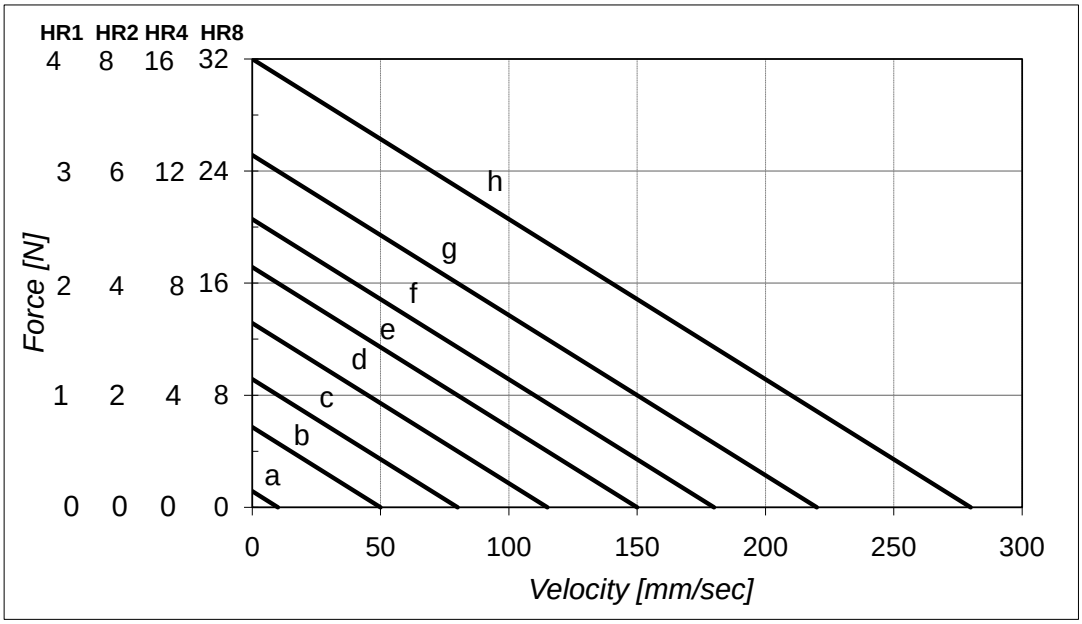

Figure 7: Force vs. Velocity Using the AB5/AB51 Driver at the Various Work Regimes (a-h)

AB5					
Curve	**Air 25°C**			**Vacuum**	
	Duty Cycle Brake_ Off [%]	**Duty Cycle Brake_On [%]**	**Continues Operation [sec]**	**Duty Cycle Brake_On [%]**	**Continues Operation [sec]**
"0"÷a	100	100	∞	28	230
b	100	100	∞	23	210
c	100	100	∞	19	150
d	100	100	∞	14	110
e	50	80	280	13	90
f	33	58	170	12	66
g	24	45	77	10	44
h	11	28	32	6.5	25

Table 3: EOP Table for HR Motors Driven by AB5 (Standard LUT)

AB51					
Curve	Air 25°C			Vacuum	
	Duty Cycle Brake_ Off [%]	Duty Cycle Brake_On [%]	Continues Operation [sec]	Duty Cycle Brake_On [%]	Continues Operation [sec]
“0”÷a	100	100	∞	56	500
b	100	100	∞	54	450
c	100	100	∞	45	280
d	100	100	∞	33	170
e	100	100	∞	23	100
f	53	58	170	12	66
g	33	48	77	10	44
h	17	28	32	6.5	25

Table 4: EOP Table for HR Motors Driven by the AB51 Driver (Reduced LUT).

Note:

- *In the Brake_Off Mode the full advantage of the AB5 driver is enabled giving a linear response, best tracking and low velocity performance. Using this mode, the motor operates continuously, even at “0” command and special attention must be given to maintain the work regime within the permitted "Duty Cycle" and "Maximal Continuous Operation Time” (refer to Table 3 and Table 4). Once the operation time has reached the "Maximal Continuous Operation Time”, even at Brake_Off Mode without motion (!) the driver must be disabled to allow the motor to cool down for at least 400 seconds in air and 700 sec in vacuum environment.*

5.2.3.1 An Example for Defining the EOP for AB5 Driver in Vacuum Environment, Brake_On Mode

A vacuum application requires 8N at a velocity of 80mm/sec and the motor is disabled when stand still (Brake_On Mode). The graph (see Figure 7) shows that this point of operation corresponds to the curve “e” (see Table 3).

Table 3 for AB5 in Brake_On Mode shows that curve “e” and a vacuum environment require that a duty cycle of 13% will not be exceeded and the maximum continuous operation time is limited to 90 seconds. Alternatively AB51 can be used giving duty cycle and continuous operation of 23% and 100 sec respectively.

The same conditions under Air at 25°C will result in 100% Duty Cycle and unlimited continuous operation.

5.2.3.2 An Example for Defining the EOP for AB5 Driver in Vacuum Environment, Brake_Off Mode

When Brake_Off Mode is used under vacuum conditions the motor will overheat at any duty cycle, if operated for a prolong time. To calculate the max operation time, use curve "0÷a" (see Table 3) for time at “0” command and the operation curve for the operating time according to the following formula:

T_{max}=(max continues operation at the operation regime) * DC + (max continuous operation under regime "a")*(1-DC).

If operating under curve "c" (see Table 3), using AB5 in a duty cycle of 10%, the total operation time is:
Tmax=150 *0.1 +230*(1-0.9)=222 sec

Once Tmax is reached, the driver should be disabled for a period of 700 sec.

5.3 TP (Thermal Protection)

5.3.1 Description

Thermal Protections is a motor protection mechanism within the AB5 and the AB51 drivers, designed to minimize damage to the motor due to overheating. It is a unique feed-forward temperature protection

feature (according to the EOP, see section 5.2), where accuracy is conditioned by the ambient temperature's input.

Based on an internal microcontroller, the TP option is an EOP computing algorithm that calculates the temperature of the motor by time integrating the command, corresponding to the input power and calculating the heating/cooling profile of the motor. This feed-forward algorithm is accurate, subject to the ambient temperature input, the proper installation of the motor, and ONLY AFTER motor's conditioning (refer to chapter 4).

5.3.2 TP Configurations

The TP option is available in the following configurations:

- HR or ST motors
- 25°C or 50°C ambient temperature
- 25°C vacuum environment

The AB5/AB51 driver is factory preset to either HR or ST motors (a permanent DIP Switch #2 configuration), according to the motor type to be driven. In addition, each AB5/AB51 driver Nanomotion delivers is preset to a standard 25°C ambient air environment, with the **TP** feature **turned on**.

To provide application flexibility for the end user's technical requirements, an authorized service technician is able to open the driver box and change the temperature and environmental configurations or to disable the TP feature completely, using the DIP Switch Position Map.

The DIP Switch Position Map appears in section 5.3.4.

The Thermal Protection feature has been implemented as a standard feature in every AB5 and AB51 drivers since March 30, 2007.

5.3.3 Benefits of Thermal Protection

The optional TP feature can be beneficial to the application, preventing the motor from overheating. A few examples are:

- A good precaution in first time integration and assembly of a system.
- Demanding applications that operate in high duty cycle.
- Joystick operation in open loop.

IMPORTANT:

To benefit from the Thermal Protection feature, the motor must be properly mounted, preloaded and conditioned.

5.3.4 The TP Feature Implementation

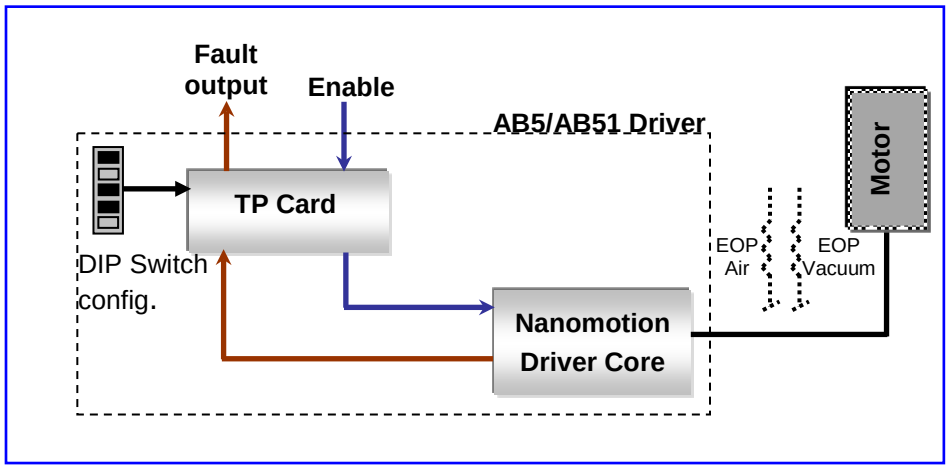

Figure ***8***: TP Mechanism Block Diagram

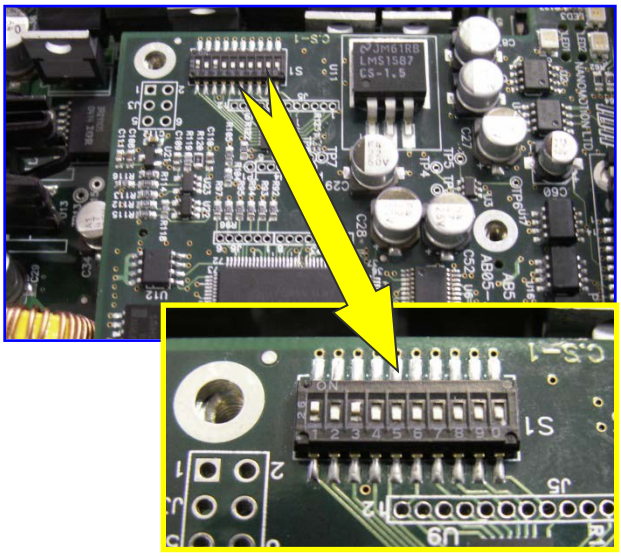

Figure 9: DIP Switch Location inside the AB5/AB51 Driver Box

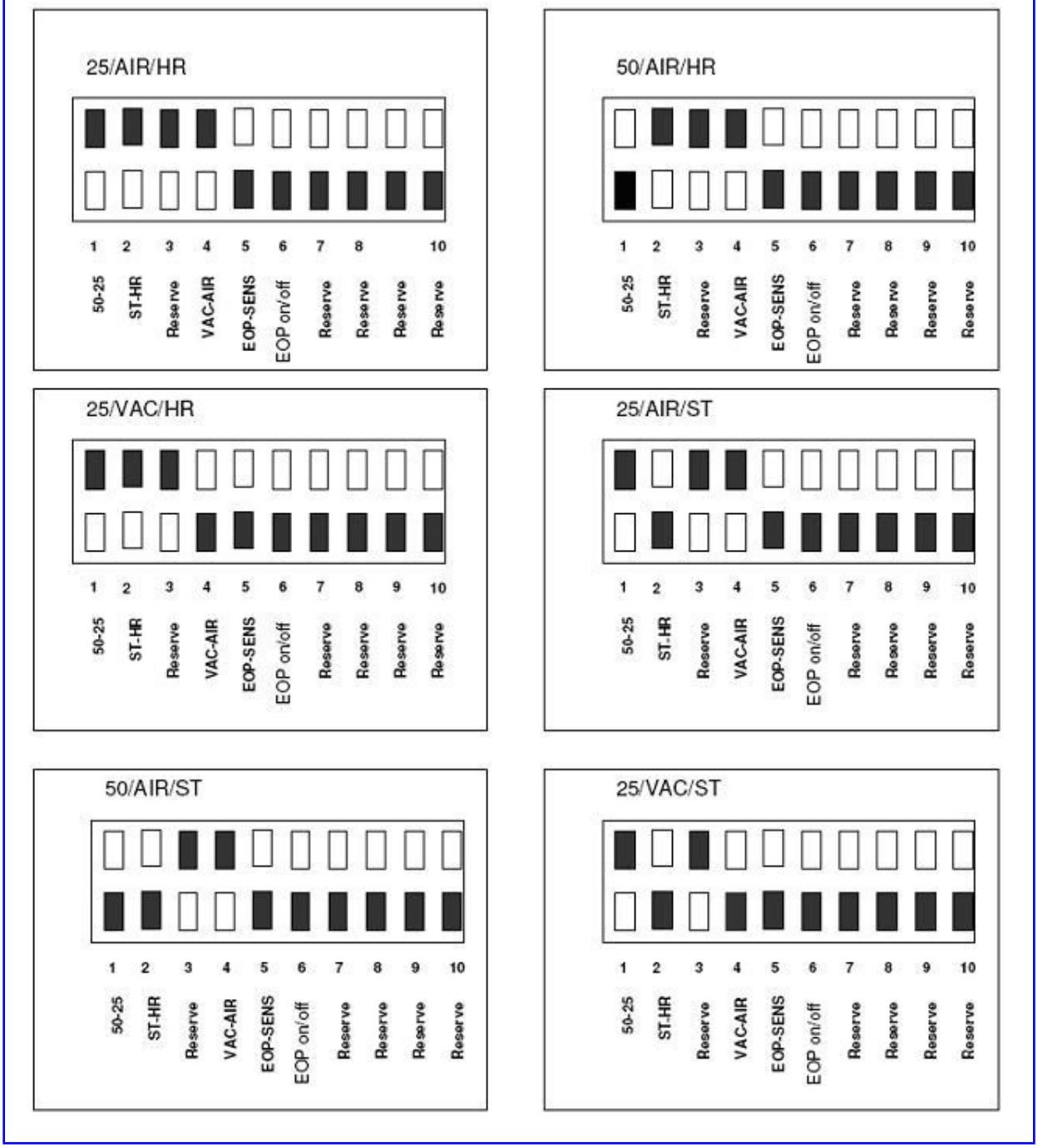
25/AIR/HR
1 2 3 4 5 6 7 8 10
50-25
ST-HR
Reserve
VAC-AIR
EOP-SENS
EOP on/off
Reserve
Reserve
Reserve
Reserve
50/AIR/HR
1 2 3 4 5 6 7 8 9 10
50-25
ST-HR
Reserve
VAC-AIR
EOP-SENS
EOP on/off
Reserve
Reserve
Reserve
Reserve
25/VAC/HR
1 2 3 4 5 6 7 8 9 10
50-25
ST-HR
Reserve
VAC-AIR
EOP-SENS
EOP on/off
Reserve
Reserve
Reserve
Reserve
25/AIR/ST
1 2 3 4 5 6 7 8 9 10
50-25
ST-HR
Reserve
VAC-AIR
EOP-SENS
EOP on/off
Reserve
Reserve
Reserve
Reserve
50/AIR/ST
1 2 3 4 5 6 7 8 9 10
50-25
ST-HR
Reserve
VAC-AIR
EOP-SENS
EOP on/off
Reserve
Reserve
Reserve
Reserve
25/VAC/ST
1 2 3 4 5 6 7 8 9 10
50-25
ST-HR
Reserve
VAC-AIR
EOP-SENS
EOP on/off
Reserve
Reserve
Reserve
Reserve

5.3.5 How It Works

The TP feature is designed with the following motor calculated temperature settings:

- Motor temperature below 85°C - normal operation.
- Motor temperature between 85°C to 100°C - warning mode. Displayed by a blinking TP LED and an on\off Fault output signal (pin #3 in the 25 pin I/O port connector).
- Motor temperature above 100°C - the motor is disabled. The TP LED is constantly on and so is the Fault output (pin #3). The driver remains disabled until motor temperature drops to 85°C (natural cooling).
- Motor temperature back under 85°C - once the driver computed the motor has cooled to just under 85°C, the TP LED will blink once and remain on and so will the Fault output signal. To resume operation, the driver will now need to be disabled and then Enabled again.

	Normal operation	**Warning zone**	**Shut down zone**
TP LED	Off	Blinking	On
Fault output (pin #3)	Off	Toggles on/off	On
Motor	Enabled	Enabled	Disabled

IMPORTANT:

Once the motor is disabled and the Fault is turned on, leave the power on and wait for the driver to Enable. **DO NOT POWER OFF THE DRIVER AND TURN IT BACK ON AGAIN BEFORE LETTING THE MOTOR COOL DOWN.** Turning off the driver when the motor is hot, and then immediately turning it on again will misalign the mechanisms' thermal calculations, as the accumulated temperature calculation was reset and the TP assumes the motor starts from the thermal equilibrium at the ambient temperature. Therefore, after the TP feature has turned the system off, it is not recommended to activate the system again until the motor is once again at the ambient temperature.

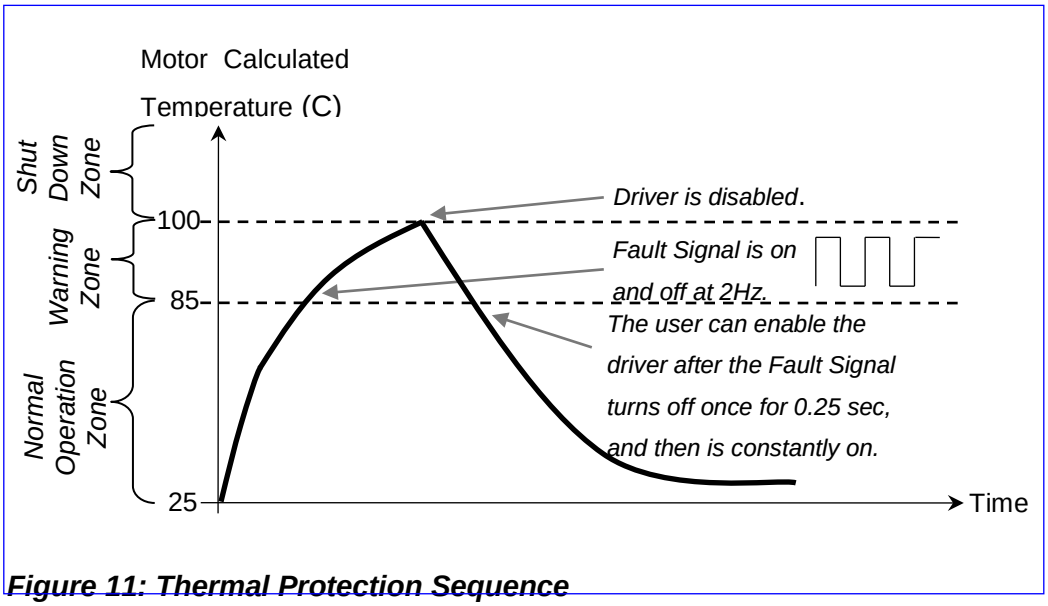

Figure 11: Thermal Protection Sequence

5.4 Front Panel Connectors and Indicators

5.4.1 Front Panel Description

The AB5/AB51 front panel (refer to Figure 14 for driver's layout) has the following connectors and indicators:

- Terminal block
- Motor output port
- I/O port connector
- Power/Enable/TP LED indicators
- Ground screw

5.4.2 LED Indicators

Condition	LED Indicator		
	Power	**Enable**	**TP**
24V power supply not connected	Off	Off	Off
24V power supply is connected	Green	Off	Off
Motor_Connected and Disabled	Green	Orange	Off
Motor Enabled	Green	Green	Off
Over voltage fault	Green	Red	Red
Warning zone temperature	Green	Green	Blink Red
Over temperature	Green	Orange	Red

Table ***5*** : Front Panel LED Indicators

5.4.3 Control Terminal Block Pinout

Pin	Signal Name	Function	Description
1	+24V	Input	+24 Vdc power supply
2	GND	Ground	
3	+Vin	Input	Analog command from controller.
4	-Vin	Input	Analog command from controller.
5	Enable	Input	Enable. See section 5.5.1

Table ***6***: Control Terminal Block Pinout

5.4.4 Motor Output Port Pinout

Pin	Signal Name	Function	Description
1	GND	Power supply ground	Safety input; shorted to pin 6 in order to verify the motor connection and to prevent driver operation without the motor.
2	N.C.	Not used	
3	Motor_Up	High voltage output	Connected to the white motor terminal.
4	Motor_Common	High voltage output	Connected to the black motor terminal.
5	Motor_Down	High voltage output	Connected to the red motor terminal.
6	Motor_Connected	Input	Safety input; shorted to pin 1 in order to verify the motor connection and prevent the driver operation without the motor.
7	GND	Power supply ground	Shorted to the shield
8	N.C.	Not used	
9	N.C.	Not used	

Table ***7***: Motor Output Port Pinout

5.4.5 I/O Port Connector Pinout

Pin	Name	Function	Description
1	V_In_Pos	Input	0 to 10Vdc Analog control
2	GND	Ground	
3	Fault	Output	See section 5.5.3.
4	GND	Ground	
5	SPI_Select	-	Disabled
6	Direction	-	Disabled
7	SPI_Data	-	Disabled
8	Acs_Int_Mode	-	Disabled
9	GND	Ground	Disabled
10	Set_Com_1	-	Disabled
11	-10V	Output	-10V supply for external device (Joystick)
12	Emergency_Stop	Input	Safety shut down, see section 5.5.1.
13	User_Voltage	Input	External power supply for the opto-isolated type inputs
14	V_In_Neg	Input	0 to -10Vdc Analog control
15	GND	Ground	
16	Step_Mode	Input	Step mode selection
17	Brake_On	Input	Disables driver operation
18	SPI_Clock	-	Disabled
19	Set_Offset	Input	Read command and remember as offset.
20	Enable_Sign_In	Input	When shorted to ground, the Enable input is active "high". Otherwise, Enable is active "low".
21	N.C.	Not used	
22	Set_Com_2	-	Disabled
23	+10V	Output	+10V supply for external device (Joystick)
24	Enable	Input	Must be activated to enable driver operation
25	N.C.	Not used	

Table ***8***: I/O Port Connector Pinout

5.5 I/Os

5.5.1 Opto-isolated Inputs

The following inputs are opto-isolated and are active “low”, i.e. by shorting them to ground (see ***Table*** 8 for more details):

- **Emergency_Stop:** disables driver’s output.
- **Enable_Sign_In:** changes Enable input logic to active “high”.
- **Enable:** enables driver operation; should be activated before operating the motor.
- **Step_Mode:** enables Step mode operation
- **Brake_On:** disables driver’s output.
- **Set_Offset:** adjust 0 (zero) command level.

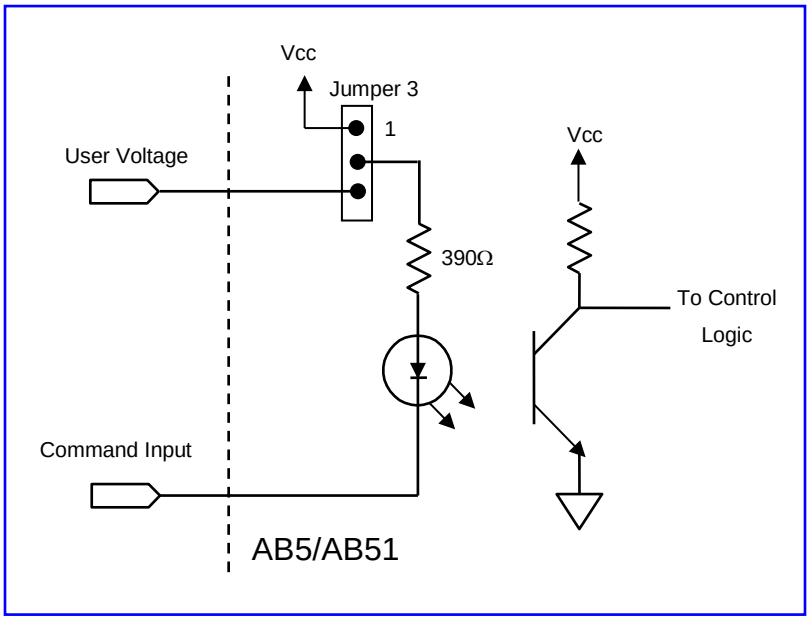

Figure 12: Opto-Isolated Input Interface

5.5.2 Voltage Source Configuration

WARNING !

Only a qualified service technician is authorized to change jumpers' configuration.

Do not short other pins on JP2. Doing so, shorts the external power supply to +3.3V! The input circuit is limited to sink up to 10 mA, but not less than 3 mA.

The opto-isolated input signals (see section 5.5) are activated as short-to-ground. The voltage for the opto-isolated circuit (see Figure 12) is provided by either internal +3.3V supply (default state) or an external voltage supply via pin 13 of the I/O port connector. The input to be activated should be shorted to the external voltage supply ground.

Configure jumper JP2 on the top AB5/AB51 card according to the voltage source:

- Pin 1 shorted to Pin 2, for an internal +3.3V source (default factory setting).
- Pin 3 shorted to Pin 4, for an external voltage source from +3.3V to +5V.

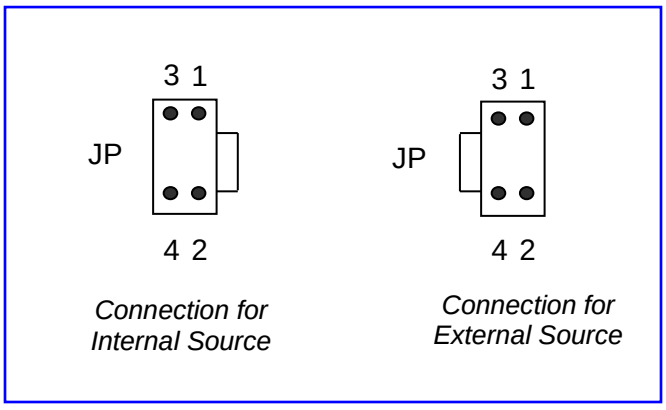

Figure ***13***: Jumper 2 Configuration

5.5.3 Fault Output

The Fault output indicates either driver's over voltage or TP violation. When active “low”, it disables the driver due to this fault.

The fault output provides an open collector interface and needs to be pulled up by the user.

The maximum allowed current through the open collector transistor is **50mA**. The appropriate pull-up resistors should be used to avoid overloading this output.

5.6 AB5/AB51 Layout

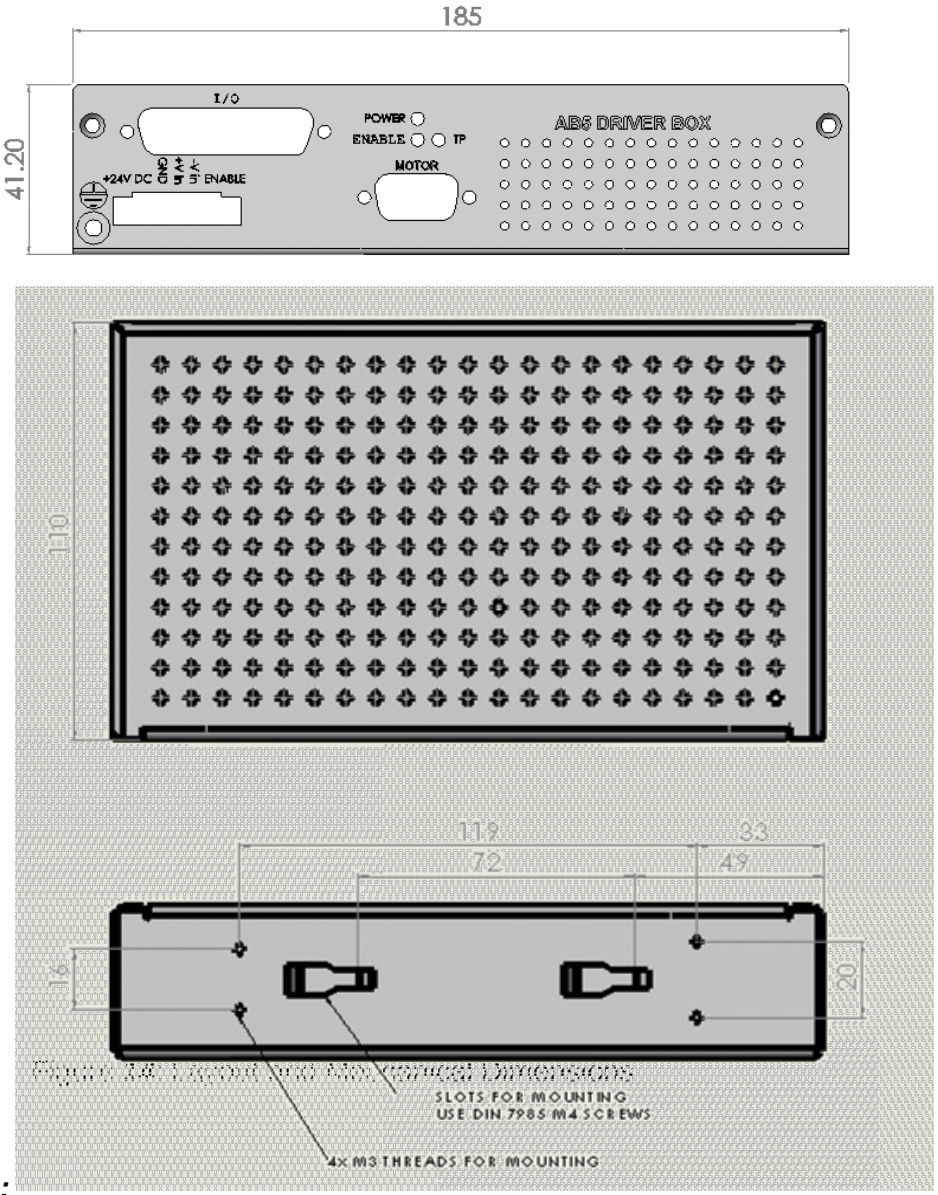

Note:

- *All Dimensions are in mm.*

6 Part Numbering Methodology

The part numbers for the AB5/AB51 drivers with Thermal Protection follow this methodology:

Driver	Motor Type*	# of Elements	Temperature	Environment
AB5	HR	EXX**	25	V***
AB51	ST	EXX	50	A***

Notes:

- ** Motor type includes **DuraMotor** series.*
- *** "XX" represents number of motor elements, ranging from 1 to 32.*
- **** "V" = Vacuum environment; "A" = Ambient air environment.*

7 Contact Information

7.1 Customer Service

Contact your local distributor or email Nanomotion Ltd. Technical Support Department at techsupport@nanomotion.com, with detailed problem description, additions, corrections or suggestions.

7.2 General Inquiries and Ordering

- Outside the USA

Nanomotion Ltd. Headquarters

Nanomotion Ltd.

PO Box 223

Yokneam, Israel 20692

Tel: + 972-73-2498065

Fax: + 972-73-2498099

Web site: www.nanomotion.com

Email: nano@nanomotion.com

- In the USA

Nanomotion Inc. (US) Headquarters

Nanomotion Inc

1 Comac Loop, Ste. 14B2

Ronkonkoma, NY 11779

Tel: (800) 821-6266

Fax: (631) 585-1947

Web site: www.nanomotion.com

Email: nanous@nanomotion.com