CCBu20 Compact Controller Board for Piezo-Actuators and Piezo-Mechanisms
PRODUCT AND WARRANTY INFORMATION

Version : 1.2
Date: 04/05/2017

CEDRAT TECHNOLOGIES
59, Chemin du Vieux Chêne - Inovallée
F-38246 MEYLAN Cedex
FRANCE

URL: http://www.cedrat-technologies.com
Email: actuator@cedrat-tec.com
Phone: +33.(0)4.56.58.04.00
Fax: +33.(0)4.56.58.04.01

CAUTION: READ BEFORE USE

For safety purposes these instructions must be read before use of this product. This product presents risks of severe injury or death due to burn hazards, electric shock, and sharp edges.


Only qualified personnel should work on or around this equipment and only after becoming thoroughly familiar with all warnings, safety notices, and procedures contained herein.

The successful and safe operation of this equipment is dependent on proper handling, installation and operation.

A "qualified person" is one who is familiar with the installation, construction and operation of the equipment and the hazards involved. In addition, he/she has the following qualifications :

- **is trained and authorized to energize, de-energize, clean, and ground equipment in accordance with established practices,**
- **is trained in the proper care and use of protective equipment in accordance with established safety practices,**
- **is trained in the soldering process and wiring of connectors,**
- **is familiar with the EMC and safety requirements.**

To comply with the safety and EMC regulation, the user must install and configure the product correctly. Qualified person, who is familiar with the EMC and safety requirements, must install the product and is responsible for ensuring that the end product complies with the relevant laws in the country, where it is going to be used. Special care should be taken regarding electrical safety since the product is capable of providing high voltages.

TABLE OF CONTENTS

1. INTRODUCTION

1.1. Overview

The CCBu20 comprises all the required electronics to control in closed-loop a two-axis push-pull piezo-mechanism, i.e. power converters, conditioners, digital controller, and digital interface. The CCBu20 has external dimensions of 92x78x35mm. The CCBu20 is shown on the Figure 1-1. The top of the packaging features two separate interface connectors:

- ➔ One for the mechanism or actuators.
- ➔ One for the supervisor (customer electronics).

The connectors are straight. The bottom of the packaging features the mechanical interfaces to attach the CCBu20. The bottom plate is also a thermal interface used to dissipate the heat of the CCBu20. The packaging also features side openings for air circulation in order to enhance the heat dissipation.

Figure 1-1: View of the CCBu20.

The CCBu20 only requires a single DC power supply between +12Vdc - +28Vdc to operate. Two status LEDs indicate the condition of the system. The green LED “Power” indicates that the CCBu20 is powered on, and the red LED “Fault” indicates if a fault condition has been detected or if the CCBu20 is disabled. The board integrates overtemperature detection, overload detection, and missing connector detection.

The functionality of the board can be set in different modes with jumpers. The choice can be made between analog and digital commands, and it is possible to select between two different speeds for the digital communication.

Digital communication with the board comes in a full-duplex serial link with RS422 signalling to reach high speeds. The digital link serves to set the parameters of the control loop, and can also serve to send the commands to the board and get feedback.

1.2. Architecture

The architecture of the CCBu20 is represented schematically on the Figure 1-2 or Figure 1-3 depending on the selected sensor. On the figure, the commands for adjusting the configuration are identified with ‘’ marks. The details of the commands are given in Section 6.4. The CCBu20 has two fully independent control channels, thus it is able to control a 2-axis push-pull mechanism, or 2 single axis piezo-mechanisms. The structure of the channels is identical, as can be noticed on the figures.

In standard, the CCBu20 features two SG sensors conditioners (one per channel) which provide a voltage output between ±10V corresponding to the position measurement. Alternatively, the CCBu20 exists in optional hardware configuration without SG conditioning. In that case, the ±10V sensor signals are provided directly on the mechanism connector, and no conditioning is applied. The sensor measurements are sampled by the controllers to perform closed-loop control. Those measurements can be read using the analog outputs “SX” and “SY”, or through the digital link.

For driving the piezo-actuators, the CCBu20 features 3 high voltage power amplifiers. The first power amplifier provides the +130V in case a push-pull mechanism is controlled, and its output voltage is fixed. The 2 other amplifiers are controllable, and each is associated to a control channel. Those amplifiers have an approximate gain of 20V/V. They take a command voltage between [-1V ; +7.5V], and output a voltage to the piezo-actuators in the range of [-20V ; +150V] approximately. The user has the possibility to set limitations on the commands before they are applied to the amplifiers. This can be very convenient to protect the system when tuning the closed-loop control, in case some instability would occur. Once the closed-loop is properly tuned and robust, the user can set again the limitations to the maximum values [-1V ; +7.5V] to achieve full stroke.

There is one digital controller per channel of the CCBu20, and they are independently configurable. The details on the closed-loop controllers are given in the Section 5. The user can configure the board to operate with analog ±10V commands from the “AIX” and “AIY” inputs, or to operate from the digital commands sent through the digital communication. The user can also select between open-loop and closed-loop operation:

- ➔ In open-loop operation, the commands are fed to the power amplifiers. In this case, the commands should remain in the input range of the power amplifiers [-1V ; +7.5V], or lower if some limitations have been applied.
- ➔ In closed-loop operation, the commands are fed to the closed-loop controllers. The closed-loop controller outputs are controlling the power amplifier inputs. The role of the closed-loop controller is to make sure that the sensor signal voltage equal to the command voltage. This means that the command gain is equal to the sensor gain, and the user should provide commands that are in the range of the sensor output. If the command is not in the sensor output range, the controller will simply saturate.

Optionally, the mechanism can integrate a PT1000 temperature sensor, as well as a DS2431 1-wire memory. Those functions are optional and thus not represented on the figures. The DS2431 memory is an option that can be used for storage of calibration data upon specific customer request, this option is managed only by Cedrat Technologies.

For the optional temperature sensor, this can be managed by Cedrat Technologies as an option directly integrated on the mechanism or actuator. If the customer is responsible for the wiring of the mechanism or actuators, he has the possibility to integrate the sensor himself. The sensor should be of type PT1000, and it should be connected between the “T°C” and “AGND” pins of the **mechanism connector**. The temperature signal can then be read as a voltage on the “T°C” analog output of the supervisor connector. The CCBu20

integrates a conditioner that provides a constant 1.613mA current to the PT1000 probe. Based on the voltage measurement on the “T°C” output, the temperature in °C is computed as follows:

Temperature [°C] = (“T°C” output [V] – 1.613) x 161

Notes:

1) **If jumper N°2 is mounted, the selection between analog and digital commands is ignored, and analog commands are used.**
2) **When monitoring the sensor signals on the “SX” and “SY” outputs, it is recommended to use a low-pass filter to remove switching noise that can appear on those lines. This is also recommended for temperature reading (if used) on the “T°C” output.**

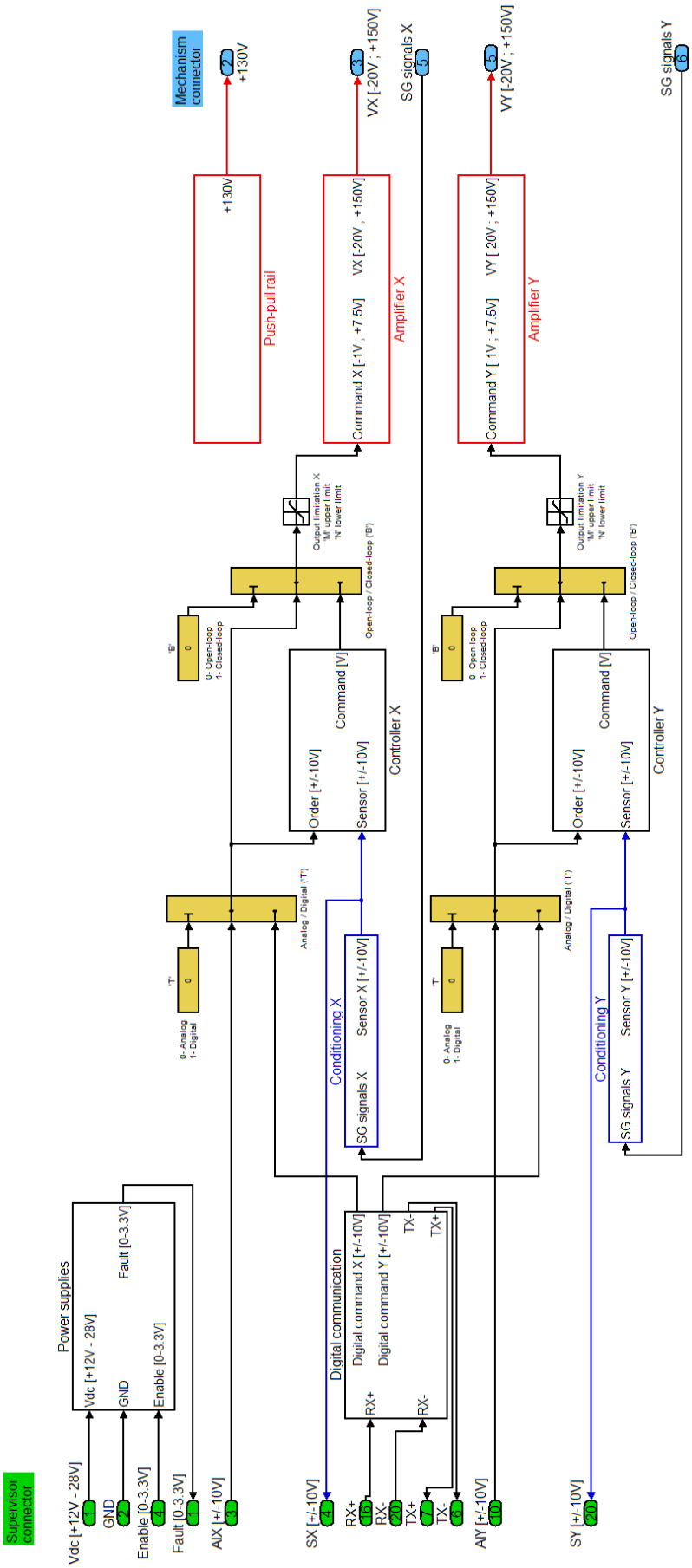

Figure 1-2: Architecture of the CCBu20 with integrated SG conditioner.

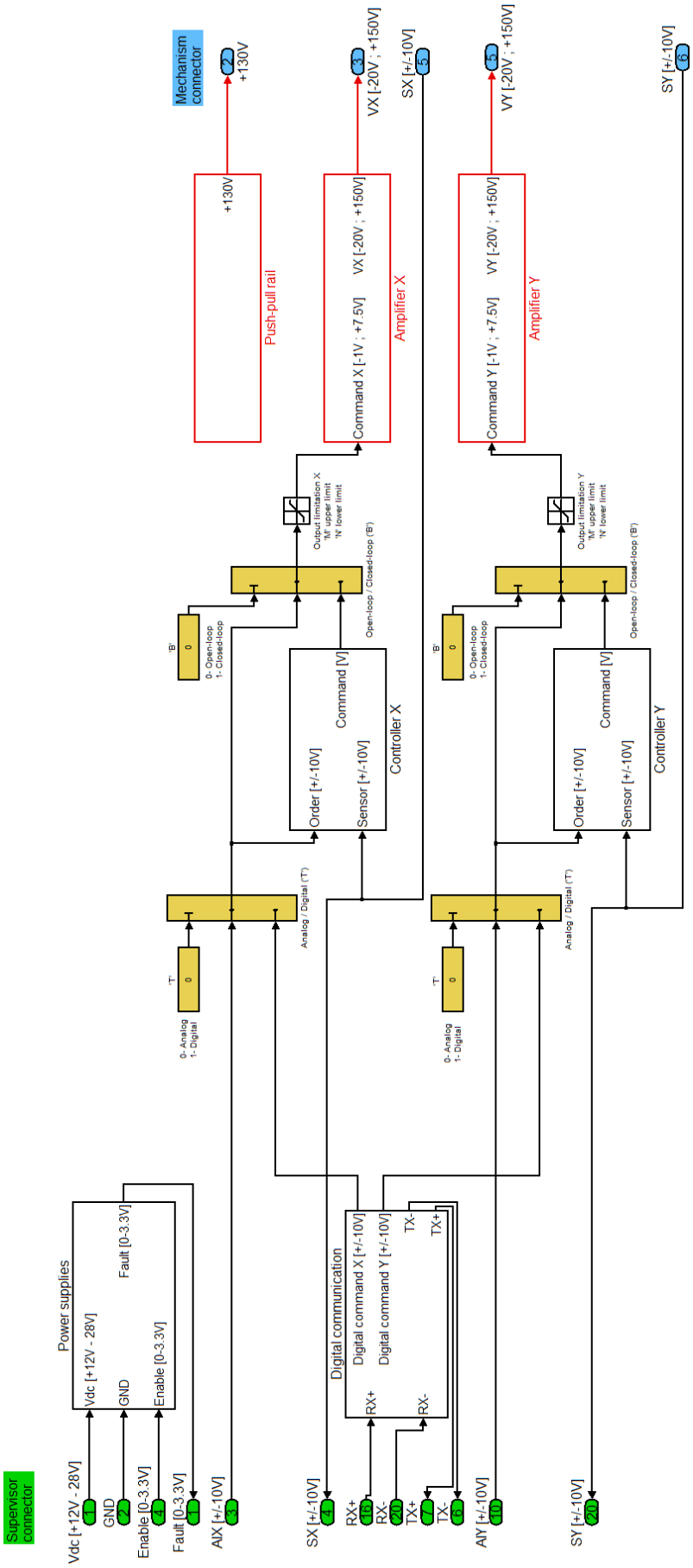

Figure 1-3: Architecture of the CCBu20 with external sensor option.

Important warning: The numbering on the Figure 1-2 and Figure 1-3 does not correspond to the pinouts of the connectors. For the connectors pinouts, please refer to Section 3.

1.3. Modes of operation

The CCBu20 can be set in different modes depending on the user requirements. The different modes are explained hereafter:

1) The digital communication speed can be selected with the jumper N°1. When the jumper N°1 is connected, the serial rate is 920kbps. When the jumper is not connected, the serial rate is 57600bps. This allows the user to use a standard slow rate when connecting the CCBu20 to a computer, for applications where latency and refresh rates are not constraints. When interfacing with a fast digital supervisor, the 920kbps rate is recommended to reduce latency and increase the refresh rate.
2) The CCBu20 can receive analog or digital commands. The supervisor connector has two ±10V analog inputs “AIX” and “AIY”, which should be used to apply the analog commands. In digital mode, the commands are sent through the serial link. When the jumper N°2 is connected, the board uses only the analog inputs. When this jumper is not connected, the type of command is selected in software between analog and digital commands.
3) The CCBu20 can operate in closed-loop or in open-loop. In open-loop, the user commands are directly sent to the power drives. In closed-loop, the CCBu20 controls the system position based on the sensor feedback and user commands. The selection between closed-loop and open-loop is done in software.

Note: The position of the jumpers is only verified on power-up. If the jumper is changed during operation, the CCBu20 will not change its configuration.

2. MECHANICAL INSTALLATION

The bottom of the packaging features 8xM3 threaded holes to allow different mounting configurations:

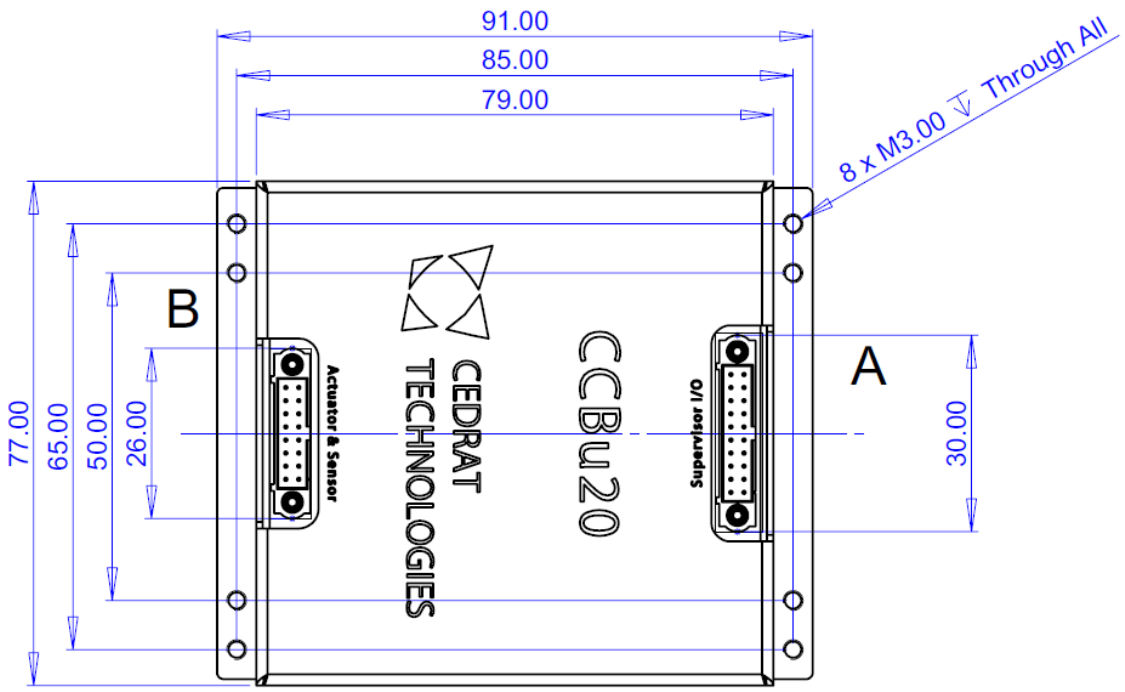

Figure 2-1: Threaded holes for installation.

Detailed mechanical ICD can be found in Annex. The bottom surface of the CCBu20 serves as a heatsink. Please check Section 8 for heatsinking requirements.

3. ELECTRICAL CONNECTIONS

IMPORTANT WARNINGs: ELECTRICAL HAZARD

For protection against electric shock, connectors must be isolated from the power supply while being assembled or disassembled.

Never perform electrical connections when the CCBu20 is powered-on. The CCBu20 provides high voltage outputs to the piezo-actuators (>100V), and there is a risk of electrical shock. If the board has been powered-on before, wait at least 1min after power-off before working on the electrical connections.

Each time the connectors are used, it should previously be inspected for external defects (particularly in the insulation). If there are any doubts as to its safety, a specialist must be consulted or the connector must be replaced.

3.1. Interface with the mechanism

For the interface of the CCBu20 with the mechanism, the connector chosen is HARWIN M80-5101642 on the CCBu20. It is a straight, through hole, male 16pins connector (Figure 3-1). To mate with this connector, the user should use M80-4611642 or M80-4811642.

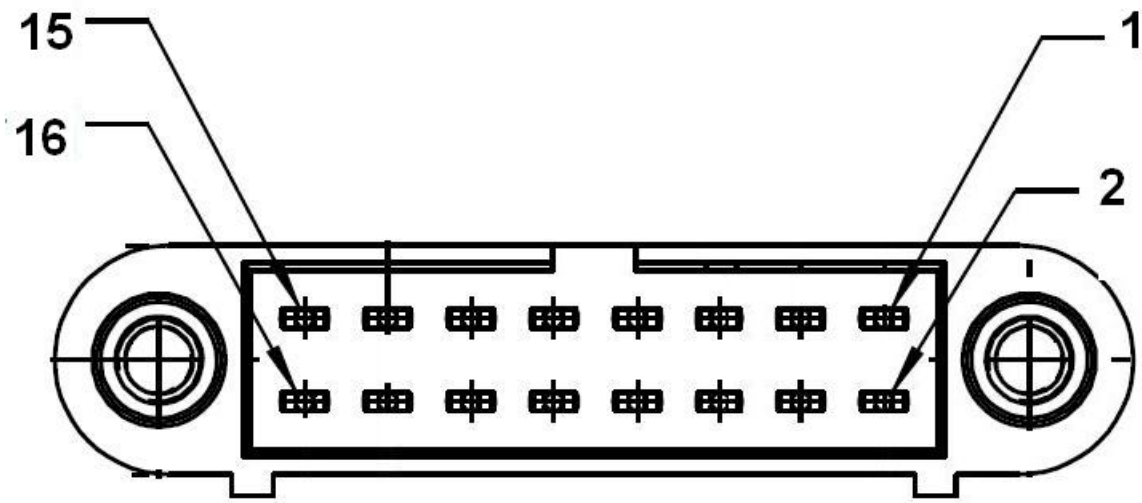

Figure 3-1: Front view of the mechanism connector M80-5101642 on the CCBu20.

The definition of the signals on the connector is given on the Table 3-1 for the standard version with integrated SG conditioning:

Signal	Description	Comment	Pin N°
+130V	+130V rail for the push-pull configuration		13
PGND	Power ground	Power signal, current return from the actuators	9,10,11,12,14
VX	X axis voltage output	This voltage is varying, and controls the displacement on the X axis	15
VY	Y axis voltage output	This voltage is varying, and controls the displacement on the Y axis	16
1WIRE	1-wire bus for EEPROM memory	Optional: can be connected to a DS2431 EEPROM located on the mechanism.	7
T°C	Temperature signal from the integrated temperature probe	Optional: can be connected to a PT1000 temperature probe located on the mechanism.	8
SGY+	Positive middle node for the Y axis SG bridge	Voltage increases when the displacement on the Y axis increases.	5
SGY-	Negative middle node for the Y axis SG bridge	Voltage decreases when the displacement on the Y axis increases.	6
SGX+	Positive middle node for the X axis SG bridge	Voltage increases when the displacement on the X axis increases.	3
SGX-	Negative middle node for	Voltage decreases when	4

	the X axis SG bridge	the displacement on the X axis increases.	
VREF	+5V voltage reference for supplying the two SG bridges	This voltage supplies two full SG bridges of 350Ω. Max current is 30mA.	1
AGND	Analog ground, return for the low power signals	This is the reference for all the low power signals, both sensors and memory	2

Table 3-1: Connection to the mechanism, with integrated SG conditioning.

The Table 3-2 provides the definition for the version with the ±10V sensor input **option**:

Signal	Description	Comment	Pin N°
+130V	+130V rail for the push-pull configuration		13
PGND	Power ground	Power signal, current return from the actuators	9,10,11,12,14
VX	X axis voltage output	This voltage is varying, and controls the displacement on the X axis	15
VY	Y axis voltage output	This voltage is varying, and controls the displacement on the Y axis	16
1WIRE	1-wire bus for EEPROM memory	Optional: can be connected to a DS2431 EEPROM located on the mechanism.	7
T°C	Temperature signal from the integrated temperature probe	Optional: can be connected to a PT1000 temperature probe located on the mechanism.	8
+15V	+15V power supply	Max current is 20mA.	5
-15V	-15V power supply	Max current is 20mA.	6
SY	Sensor input related to the Y axis	±10V range	3
SX	Sensor input related to the X axis	±10V range	4
VREF	+5V voltage reference	Max current is 30mA.	1
AGND	Analog ground, return for the low power signals	This is the reference for all the low power signals, both sensors and memory	2

Table 3-2: Connection to the mechanism, with ±10V sensor input option.

Note: PGND pin 10 has to be connected together with at least one of the others PGND pins (9, 11, 12, 14) on the mechanism side, since this is used to detect the mechanism connection. If pin 10 is not connected to PGND, the CBBu20 will not detect the connector, and it will remain in Fault condition (red indicator). This connection can be done directly on the mechanism connector if desired.

3.2. Interface with the supervisor

For the interface with the supervisor, a HARWIN M80-5102042 is selected on the CCBu20. It is a straight, through hole, male 20pins connector (Figure 3-2). To mate with this connector, the user should use M80-4612042 or M80-4812042.

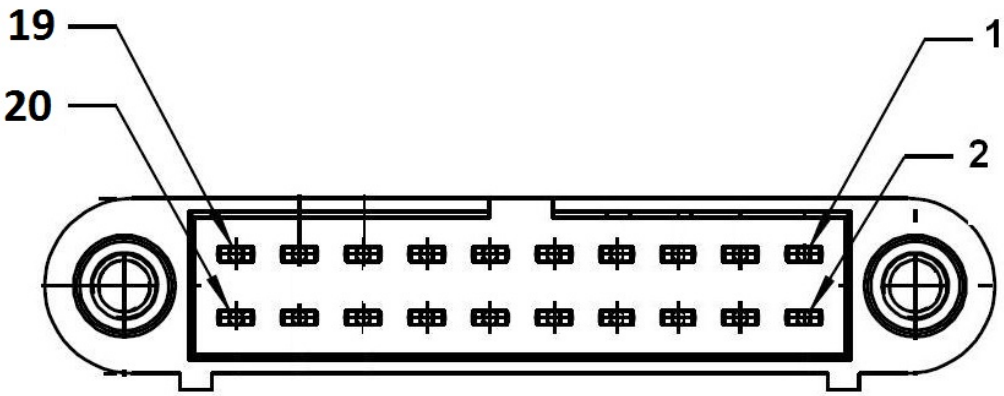

Figure 3-2: Front view of the supervisor connector M80-5102042 on the CCBu20.

The definition of the signals on the connector is given on the Table 3-3:

Signal	Description	Comment	Pin N°
Vdc	CCBu20 power supply	+12V - +28V range, with maximum 1A continuous capability. Referenced to GND.	1,2
GND	CCBu20 ground	Reference of the CCBu20. **Connected to mechanical ground.**	3,4
RX+	Positive Receive RS422 signal	Digital input. Referenced to GND	5
RX-	Negative Receive RS422 signal	Digital input. Referenced to GND	6
TX+	Positive Transmit RS422 signal	Digital output. Referenced to GND	7
TX-	Negative Transmit RS422 signal	Digital output. Referenced to GND	8
Reserved		Do not connect	9
Reserved		Do not connect	10
Reserved		Do not connect	11
Reserved		Do not connect	12
Enable	Digital enable input	0-3.3V input. Referenced to GND	13
Fault	Digital fault output	0-3.3V output. Referenced to GND	14
AGND	Analog ground	Reference for analog I/Os.	15
T°C	Mechanism analog temperature output	0-3.3V output. Only valid if PT1000 is used on the mechanism. Referenced to AGND	16
AIX	Analog order input for X axis	±10V input. Referenced to AGND	17
AIY	Analog order input for Y axis	±10V input. Referenced to AGND	18
SX	Analog sensor output for X axis	±10V output. Referenced to AGND	19

SY	Analog sensor output for Y axis	±10V output. Referenced to AGND	20

Table 3-3: Connection with the supervisor.

Warning: The analog output signals "SX", "SY", and "T°C" have a 20kΩ output impedance for protection. If used, they should be monitored with high input impedance device, or the 20kΩ output impedance should be taken into account.

4. STARTING AND OPERATING THE CCBU20

Warnings:

1) **The supply voltage should never exceed +32Vdc. Exceeding +32Vdc will lead to permanent damage of the CCBu20.**
2) **The wiring and mechanical installation should be performed before powering up the CCBu20.**
3) **Jumpers should be set to the desired configuration before power-up.**

First, the CCBu20 should be powered on by a nominal supplying a voltage between +12Vdc and +28Vdc. After power-up, the green "Power" indicator should light.

The CCBu20 startup is controlled with the "Enable" digital input on the supervisor connector. When the "Enable" signal is low (0V), the CCBu20 remains in standby, and power converters are not activated. In this mode, no motion can be applied to the actuators. In standby, the "Fault" LED and "Fault" signal are set to indicate that the system cannot operate. In this mode, the power consumption is reduced. When the "Enable" signal is brought high (+3.3V), the CCBu20 launches the startup procedure. If the startup is successful (no fault detected), the CCBu20 starts operating normally and applies the user commands. The CCBu20 can be deactivated at any time by bringing the "Enable" signal low.

The board is capable to detect 3 fault conditions:

- ➔ Overtemperature
- ➔ Overload
- ➔ Missing connector (no mechanism is connected)

Upon startup of the board, the conditions are tested. If a fault is detected the board will go to fault mode, and the red LED "Fault" will light to indicate the fault condition. In addition, the "Fault" output will be set to the high level (+3.3V). In fault mode, the power converters are deactivated, and the board will not function properly. Fault mode is equivalent to standby mode. To regain functionality after a fault, the user has to reset the board:

1) The "Enable" input should be asserted low (0V), and then high (+3.3V) again to try to restart the board. If the startup procedure is successful, the board will operate properly.

Overtemperature condition is constantly monitored during the system operation. If the overtemperature condition appears during the normal system operation, the board will go to the fault mode. The same principle applies for the missing connector detection.

Note: The communication becomes active as soon as the green "Power" indicator lights. The communication remains active even in Standby of Fault condition.

5. CONTROL

The CCBu20 is delivered with the following configuration:

- ➔ Analog "AIX" and "AIY" commands.

- ➔ Closed-loop operation.
- ➔ P=0.05, I=200, D=0.
- ➔ Output filter is a second order lowpass filter with cutoff frequency of 200Hz.
- ➔ The output limitations are [-1V ; +7.5V].

With this configuration, the CCBu20 will operate properly in closed-loop at low frequency. If the user wants to reach higher bandwidth, he should tune the controller parameters through the digital link.

The role of the closed-loop control is to make sure that the sensor feedback is equal to the command. This means that the system gain in closed-loop corresponds to the SG sensor gain, provided in the factory verification sheet.

Warnings:

1) **When tuning the control parameters, the user should avoid instability conditions. In case of instability, there is a risk of damage to the actuators and CCBu20. Please refer to the application note "Position Control of Piezo Actuators" for hints on how to tune a controller for piezo-actuator. You can download this application note here:** http://www.cedrat-technologies.com/en/products/users-manual.html.
2) **The sensor feedback has to be in phase with the piezo voltage. This can be checked by operating the CCBu20 in open-loop, the sensor should be in phase with the command. If this is not the case (in particular with the external sensor option), there is the possibility to adjust and invert the sensor feedback gain in software if needed. See digital command 'G' in the Section 6.4.**

The CCBu20 performs a digital control law basically consisting in a PID controller with a selectable and tunable output filter. Each of the two channels has its own independent controller, which can be tuned independently. The CCBu20 refresh rate is of 20kSps.

The controller is presented schematically on the Figure 5-1. The user can modify all control parameters to optimize the performance. The commands for adjusting the parameters are identified with '' marks. The details of the commands to adjust the control parameters are given in Section 6.4.

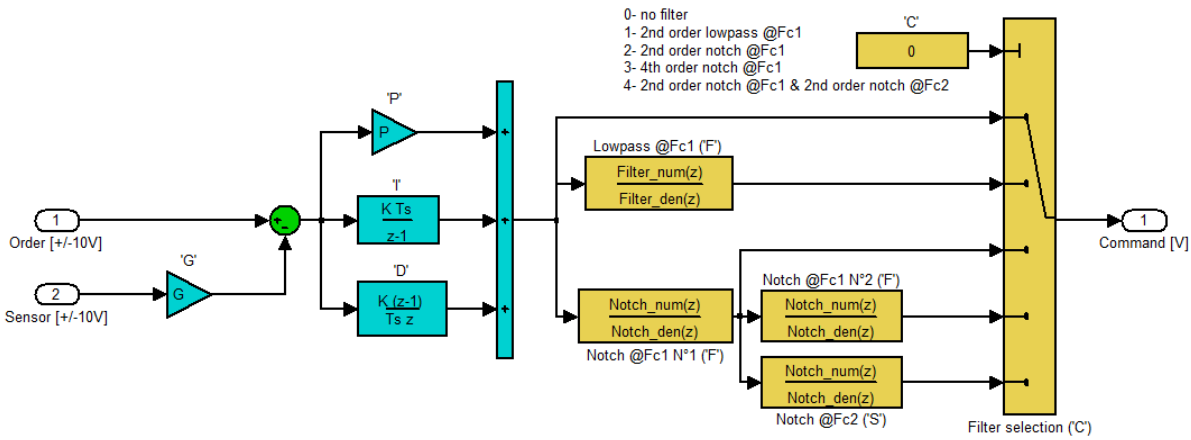

Figure 5-1: Controller structure.

6. COMMUNICATION INTERFACE

The digital link serves to set the control parameters, and can also serve to send the commands and read sensors. The CCBu20 can be interfaced and configured manually over

the serial link (section 6.1 to 6.4), alternatively it offers compatibility with the HDPM45 GUI provided by CTEC for its controllers (see section 6.5).

Note: The communication becomes active as soon as the green "Power" indicator lights. The communication remains active even in Standby of Fault condition.

6.1. Settings

The digital interface is a serial full-duplex link. RS422 signalling is implemented to reach high transmission rate. The parameters of the serial communication are the following:

- ➔ 57600baud by default or 920kbaud rate if jumper N°1 is mounted,
- ➔ 8 data bits,
- ➔ 1 stop bit,
- ➔ No parity bit,
- ➔ No flow control.

Data is in ASCII format to allow the user to adjust the CCBu20 configuration using a serial terminal on a computer. If installed, Hyperterminal can be used. If no terminal is installed, the user can use other Terminal softwares such as Puttytel (http://www.chiark.greenend.org.uk/~sgtatham/putty/download.html).

Note: To interface with a computer with only USB ports, the user can use a USB-RS422 converter, such as FTDI converters: http://www.ftdichip.com/Products/Cables/USBRS422.htm. In this case, a serial interface will appear on the computer (virtual COM port) when connected. The user should install the drivers on the computer before connecting the converter. The drivers are available on the FTDI website: http://www.ftdichip.com/Drivers/VCP.htm

6.2. Command format

The commands consist in a chain of characters that will be interpreted by the electronics before it is applied. The number of characters in a command is not fixed, but it cannot exceed 20 characters, nor be shorter than 3 characters. The command structure is as follows:

"COMMAND CHARACTER + VALUE + EXECUTION CHARACTER"

1) The command always starts with a single command character. The list of command characters and their use is given in Section 6.4.
2) The command character is always followed by a parameter value in decimal. In this field, only numeric characters are allowed, as well as signs ('+' or '-'), and decimal separator '.'. It is not authorized to leave this field empty. If unused it can be filled with '0'. The parameters to the CCBu20 can be integer of floating values.
3) The command is always ended by the execution character 'E' (in capital letter). This character indicates the end of the command. After this character, the electronic executes the command and answers or acknowledges. Another command can then be issued.

Warning: Do not use carriage return or "enter" button of the keyboard to send the command, as this will introduce an invalid character in the chain. The commands are only executed with 'E' character.

6.3. Answer format

The format of the CCBu20 answer to the command is the following:

"N x 4 DATA BYTES (OPTIONAL) + ACKNOWLEDGEMENT CHARACTER"

For commands used to request feedback from the electronics, the answer starts with N x 4 data bytes. Each packet of 4 data bytes represents a 32bits signed integer value. Depending on the request, the CCBu20 will reply with a different number of data packets before acknowledging. The MSB is sent first, le LSB is sent last. **Thus, those data bytes should not be interpreted as ASCII characters but directly as pure data bytes.**

For commands with no feedback, the first field is empty, i.e. no data bytes are transmitted.

The last character of the answer is always the acknowledgement character, which indicates that the command was received and applied:

- ➔ The acknowledgement character is 'X' (0x58) when the command has been properly applied.
- ➔ The acknowledgement character is 'Y' (0x59) when an error has been detected in the command. In that case, the command is not applied. This happens in particular in the following cases:
  - o The command is unknown.
  - o The command length exceeds 20 characters.
  - o The command length is less than 3 characters.
  - o The field value contains non numeric characters.
  - o The field value is empty.
  - o The field value is out of range for the corresponding command.

Important note: Since no flow control is implemented in the serial configuration, the flow control is performed with the acknowledgement characters. It is thus recommended to wait for acknowledgement 'X' before sending the next command. In case a new command is issued while acknowledgment of the previous command has not been received, an overflow of the serial buffer could occur, leading to a communication error, and the command would be ignored

6.4. List of commands

The list of available digital commands for the CCBu20 is given in the Table 6-1:

Command character	Description of the command	Parameter range	Examples
'V'	This command allows selecting the axis on which the next digital commands will be applied. **Once an axis is selected, all following commands apply to this same axis, until another selection is made.** Upon power-up, the axis X is selected by default.	1: The axis X is addressed 2: The axis Y is addressed	'V1E' selects the X axis for the next commands.
'B'	This command allows selecting open-loop or closed-loop operation.	0: Open-loop operation of the selected axis 1: Closed-loop operation of the	'B1E' selects closed-loop operation.

		selected axis	
'T'	This command allows between digital command or analog command. This configuration is ignored if jumper N°2 is mounted. In that case, analog commands are used on both axis.	0: Analog command 'AIX/Y' is used for the selected axis 1: Digital command is used for the selected axis	'T1E' selected the digital command.
'Z'	This command sets the digital order value for the selected axis. This command should be used for sending commands in real-time (faster execution time). The digital order will be used only if the corresponding axis is setup for working with digital commands.	[-10V ; +10V]	'Z2.435V' sets a digital order of 2.435V.
'W'	This command sets the digital order value for the selected axis, and saves it to the memory (longer execution time). The digital order will be used only if the corresponding axis is setup for working with digital commands.	[-10V ; +10V]	'W-5.335E' sets a digital order of -5.335V.
'M'	This command sets the upper limit for the output to the power amplifier, for the selected axis. If the controller output is larger, it will be saturated to this value. The upper limit has to be larger than the lower limit.	[-1V ; +7.5V]	'M4.678E' sets the upper limit of the output at 4.678V.
'N'	This command sets the lower limit for the output to the power amplifier, for the selected axis. If the controller output is smaller it will be saturated to this value. The lower limit has to be smaller than the upper limit.	[-1V ; +7.5V]	'N-0.65E' sets the lower limit of the output at -0.65V.
'P'	Sets the proportional term P of the PID controller, for the selected axis.	P≥0	
'I'	Sets the integral term I of the PID controller, for the selected axis.	I≥0	
'D'	Sets the Derivative term D of the PID controller, for the	D≥0	

	selected axis.		
‘F’	Sets the cut-off frequency Fc1 of the notch filter and the low-pass filter, for the selected axis.	Fc1≥0	
‘S’	Sets the cut-off frequency Fc2 of the second notch filter (activated for C=4) , for the selected axis.	Fc2≥0	
‘C’	Selects the output filter to be applied on the PID output, for the selected axis.	0: No filter 1: 2nd order Low-pass filter (Fc1). 2: 2nd order Notch filter (Fc1) 3: 4th order Notch filter (Fc1) 4: 2 x 2nd order Notch filters in series with two different frequencies (Fc1 and Fc2)	
‘G’	Sets the linear gain of the sensor feedback, for the selected axis. This gain can be used to invert sensor feedback or to rescale the order magnitude (since the order gain corresponds to the sensor gain). This only changes the gain of the sensor in software, the analog sensor signals are not impacted. This gain is set to 1 by default. In standard configurations, it is recommended to leave it unchanged.		‘G1E’ sets the linear gain of the sensor feedback to 1.
‘Q’	This command requests the sensor feedback. This command operates in the same manner whatever the axis selected. The electronic answers with 4 data bytes followed by acknowledgement character. The 4 data bytes represent a signed integer value. Based on this value, the status of the system is as follows: Sensor feedback [V] = Value / 3276.8	1: Sensor feedback for axis X is requested. 2: Sensor feedback for axis Y is requested.	‘Q2E’ requests the sensor feedback for axis Y. The electronics will reply 0xFFFFEAE258: -> 0xFFFFEAE2 corresponds to a -1.65V sensor feedback. -> 0x58 at the end corresponds to the ‘X’ acknowledgement.

'R'	This command requests the parameter set of one axis. This command operates in the same manner whatever the axis selected. The electronic answers with 15 x 4 data bytes followed by acknowledgement character. Each 4 data bytes represent a signed integer value corresponding to a single parameter. The parameter readback description is given in the Table 6-2.	1: Requests the parameter set for axis X 2: Requests the parameter set for axis Y	'R1E' requests the parameter set for axis Y.

Table 6-1: Description of the commands.

Position in CCBu20 answer	Description	Conversion / Interpretation
1 (first 4 bytes sent)	Analog or digital command selection	No conversion required: 0: The axis is configured for analog command. 1: The axis is configured for digital command.
2	Digital command	Command [V] = Value / 3276.8
3	Open-loop or closed-loop selection	No conversion required: 0: The axis is configured in open-loop. 1: The axis is configured in closed-loop.
4	Parameter P	P = Value / 65536
5	Parameter I	I = Value / 65536
6	Parameter D	D = Value / 65536
7	Output filter selection	No conversion required: 0: No filter 1: 2nd order Low-pass filter (Fc1). 2: 2nd order Notch filter (Fc1) 3: 4th order Notch filter (Fc1) 4: 2 x 2nd order Notch filters in series with two different frequencies (Fc1 and Fc2)
8	Fc1 cutoff frequency	No conversion required: Fc1 = Value
9	Fc2 cutoff frequency	No conversion required: Fc2 = Value
10	Output upper limitation	Upper limit [V] = Value / 3276.8
11	Output lower limitation	Lower limit [V] = Value / 3276.8
12	Sensor feedback gain	Gain = Value / 65536
13	Firmware version	No conversion required: Version = Value For instance a value of 100 means version 1.00
14	Serial number	No conversion required: Serial number = Value For instance a value of 15001 means

		serial number 15-001 (year of manufacturing 2015, CCBu20 N°1)
15 (last 4 data bytes before acknowledgement)	Not used	
16	Acknowledgement character 'X'	

Table 6-2: Description of parameter set read back.

Notes:

1) **Do not forget to send the 'V' command to select the axis for which you want the parameters to be adjusted.**
2) **When a parameter of the CCBu20 is modified, the new parameter value is automatically saved in a non volatile memory. The parameters of the CCBu20 are automatically recalled on startup, so that the user does not have to reconfigure the board on every power-up.**
3) **Since those commands write the memory, their execution time is longer.**
4) **This does not apply on 'V' and 'Z' commands, which modify parameters but do not write to the memory. As a consequence, their execution is faster.**

6.5. HDPM45 GUI

The CCBu20 is compatible with the HDPM45 GUI that allows configuring the control law with a computer over a serial COM port. If the computer does not feature a serial COM port, a serial port can be emulated on a computer using a RS422 to USB computer (check section 6.1 for more details).

Important note: The HDPM45 GUI uses hardware flow control for its serial communication. Since the CCBu20 does not use the hardware flow control, the user has to force manually the CTS signal of the computer or the converter to a low level to authorise communication. This can be simply be done by shorting RTS+ to CTS+ and RTS- to CTS- on the converter or computer connector.

The last version of the HDPM45 software can be downloaded here:
http://www.cedrat-technologies.com/en/mechatronic-products/download/graphical-users-interface.html

For the use and installation of the HDPM45 software, refer to the section 4 and 5 of the UC45 user's manual, which can be found online:
http://www.cedrat-technologies.com/en/products/users-manual/electronics.html

7. POWER SUPPLY, POWER CONSUMPTION, OUTPUT CURRENT CAPABILITY

The CCBu20 is supplied with a DC voltage between +12V and +28V. The power supply return is the CCBu20 ground reference, and it is connected to the packaging for shielding.

Warnings:

1) **The supply voltage should never exceed +32Vdc. Exceeding +32Vdc will lead to permanent damage of the CCBu20.**
2) **The power supply should have a peak current capability of at least 1.5A, which is required during startup. If you are using a current limited supply, set the current limitation to at least 1.5A, to avoid any problem during startup.**

The power consumption of the CCBu20 is approximately 6W in static operation. Static operation means that the CCBu20 is enabled, no error is detected, and the commands are steady, i.e. the system is not moving. In dynamic operation, i.e. when the system is moving, the power consumption will increase linearly with the increase of output current to the piezo-ceramics. The CCBu20 accepts a maximum 1A continuous supply current, which means that the maximum power consumption is directly linked to the supply voltage, as shown on the Figure 7-1:

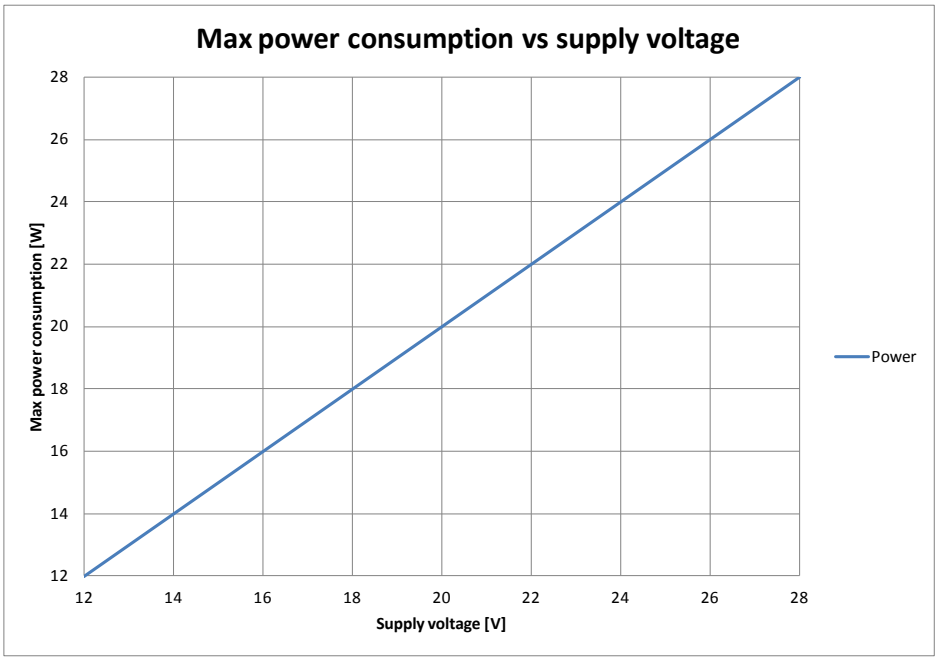

Figure 7-1: Maximum power consumption versus supply voltage.

The CCBu20 is capable of outputting a maximum output current of 35mArms per channel, for +28Vdc supply, leading to approximately 28W power consumption. With 35mArms per channel, this means in total 105mArms for the three output channels (two axis outputs and one push-pull rail). For supplies lower than +28Vdc, the maximum output current is reduced linearly as shown on the Figure 7-2:

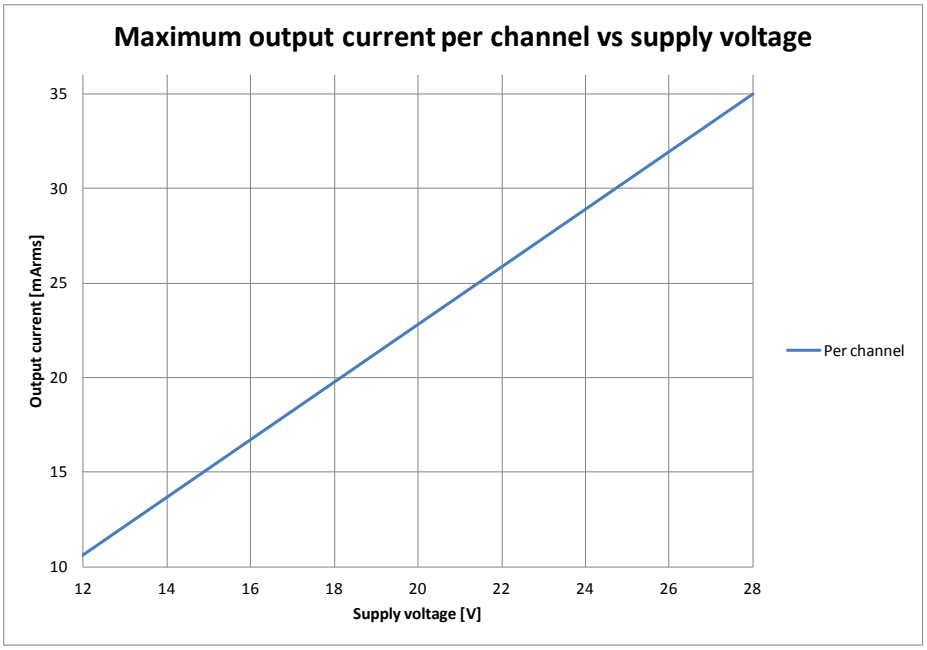

Figure 7-2: Maximum output current per channel versus supply voltage.

For applications where the output current demands is not equal between channels, or for which channels are not used, the analysis can be done based on the maximum total output current. The maximum total output current versus supply voltage is given on the Figure 7-3. **This RMS output current budget can be distributed unevenly between the three channels, but it should never exceed 35mArms for one channel.**

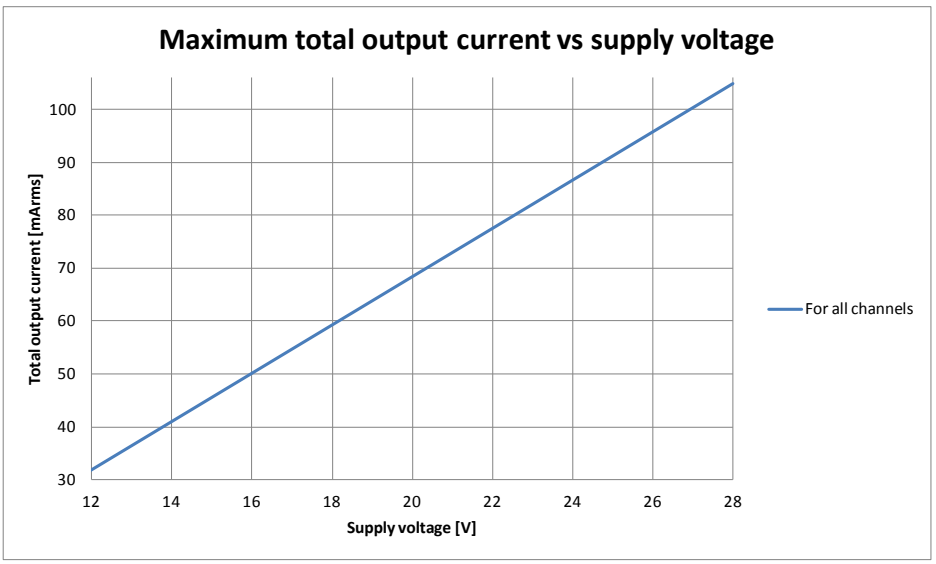

Figure 7-3: Maximum total output current versus supply voltage.

The power consumption of the CCBu20 is linked to the total RMS output current to the actuators, and the relationship is given by Figure 7-4:

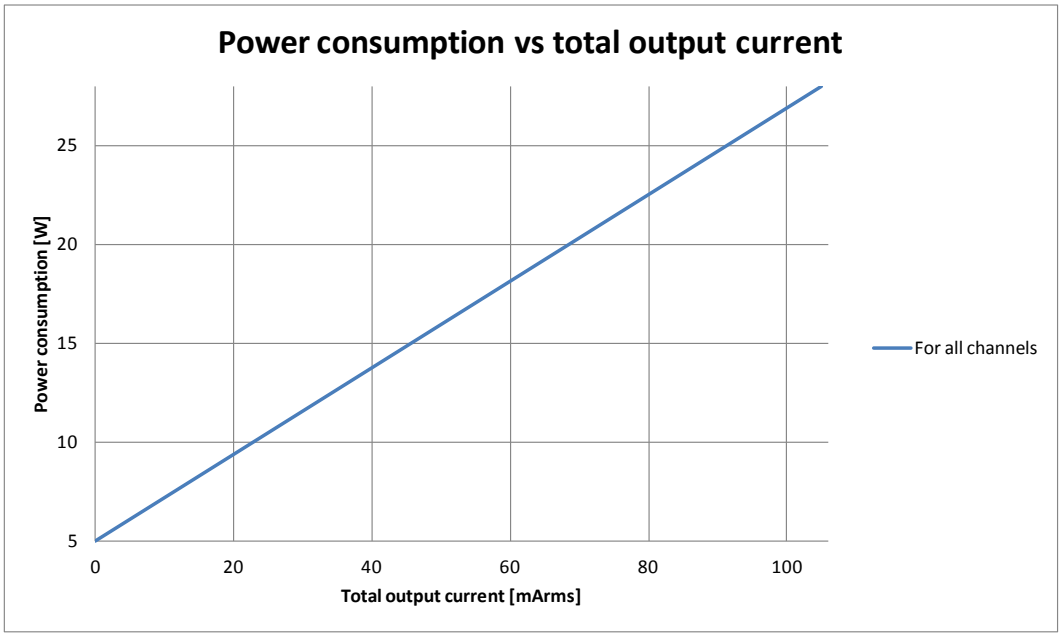

Figure 7-4: Power consumption versus total output current.

8. THERMAL INTERFACE

WARNING: Risk of burns

The product and especially its thermal interface can be very hot (>100°C) when operating and after operation. There is a risk of burns when touching the packaging.

The bottom plate of the CCBu20 is the heat sinking surface (see Figure 8-1). To prevent from overheating at high temperature and/or high power, the user has to implement proper heat sink for cooling. This can be done by attaching a spare heatsink, or directly by attaching the CCBu20 on a surface providing heat dissipation.

Figure 8-1: Heat sinking surface.

The requirement for the heat sink efficiency depends both on the maximum ambient temperature of the application and the CCBu20 power consumption (estimated on the Figure 7-4). The maximum thermal resistance of the heat sink from the CCBu20 surface to ambient is computed using the following equation:

$$R_{heatsink} = ((125 – T_{max}) / P_{CCBu20}) - 0.5$$

Where $R_{heatsink}$ is the thermal resistance of the heatsink in °C/W, T_{max} is the maximum ambient temperature in °C, and P_{CCBu20} is the power consumption of the CCBu20 in W.

Based on this equation, maximum $R_{heatsink}$ can be computed in two specific cases:

- ➔ At +70°C, depending on the power consumption, on the Figure 8-2.
- ➔ At 28W, depending on the ambient temperature, on the Figure 8-3.

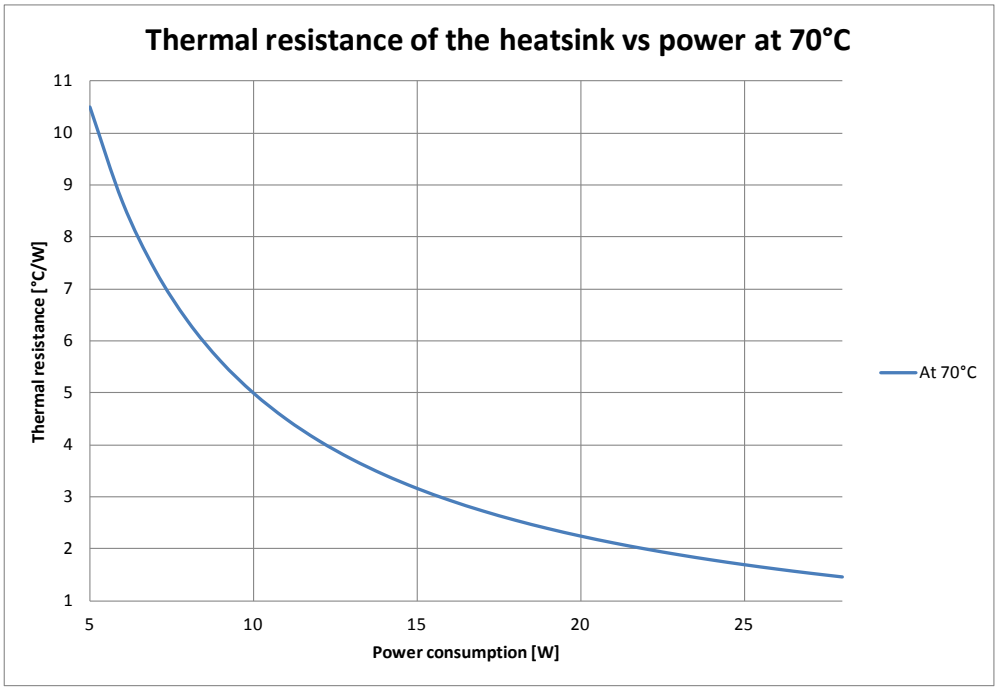

Figure 8-2: Maximum thermal resistance depending on the power consumption, at +70°C.

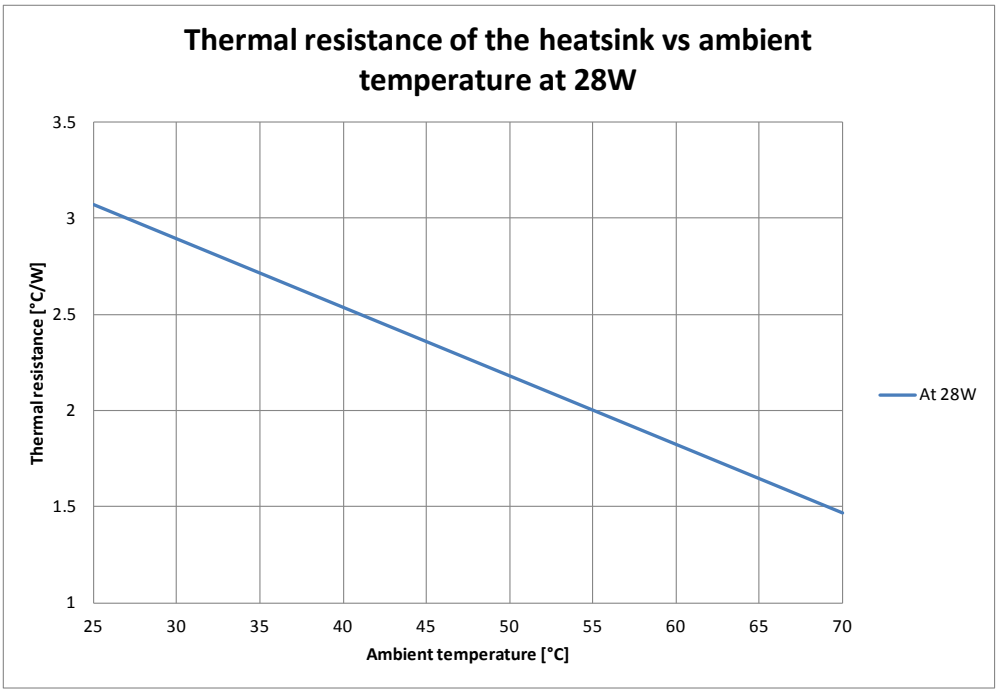

Figure 8-3: Maximum thermal resistance depending on the ambient temperature, at 28W.

9. TECHNICAL SPECIFICATIONS

The CCBu20 specifications are summarised in the Table 9-1:

Specification	Value	Comment
General		
Number of axis	2	The board can control up to 2 axis in push-pull configuration.

Modes	Open-loop / Closed-loop Analog / Digital commands	The mode selection is performed with jumpers and through the digital link.
Fault	Overtemperature, Overload, Missing connector	
Weight	235g	
Supply voltage	[+12 ; +28]Vdc	Maximum output power linearly depends on supply voltage. For applications requiring maximum power, +28Vdc supply is recommended.
Typ. static power consumption	6W	CCBu20 is operating, but no displacement is commanded.
Max. dynamic power consumption	28W	At +28Vdc supply. Lower power has to be considered for lower supply voltages.
Temperature range	[-40 ; +70]°C	For high temperature combined with high power, proper heatsinking has to be implemented.
Power drives		
Output voltage	[-20 ; +150]V	
Push-pull rail	+130V	
Peak output current	0.2A	
Max. RMS output current	35mArms	At +28Vdc supply. Lower output current has to be considered for lower supply voltages.
Bandwidth	15kHz	Small-signal bandwidth
Sensors		
Conditioner	Full bridge Strain Gages (SG) conditioner	Optional direct ±10V analog sensor feedback for mechanism with integrated conditioning or for other sensors.
Gain	546.45V/V	Typical value
Bandwidth	15kHz	
Reference voltage	+5V	The reference voltage has a current capability of 30mA to supply two 350Ω SG bridges.
Readings	Analog readings or digital feedback	The ±10V sensor signals after conditioning are available on the supervisor connector. The sampled sensor signals can be read through the digital link.
Control		
Control type	PID + output filters	Optional advanced control for enhanced closed-loop response.
Refresh rate	20kSps	
Controller parameters tuning	Through digital link	In case of advanced control

		option, the control configuration is optimised and locked, and it cannot be modified by the user.
Command type	Analog or digital command	The commands can be fed in analog ±10V through the supervisor connector. The commands can be sent through the digital link. The type of command is selected with the appropriate jumper.
Digital interface	Serial full-duplex 57600bps or 920kbps, with RS422 signalling	The communication speed is selected with a jumper.

Table 9-1: Specifications of the CCBu20.

10. INSPECTION UPON RECEIPT

This product has been inspected and shown to operate correctly at the time of shipment, as verified by the Factory Verification Form that accompanies the product.

Immediately upon receipt of the product, it should be inspected carefully for any signs of damage that may have occurred during shipment. If any damage is found, a claim should be filed with the carrier.

The package should also be inspected for completeness according to the enclosed packing list. If an order is incorrect or incomplete, contact your distributor.

11. ANNEX

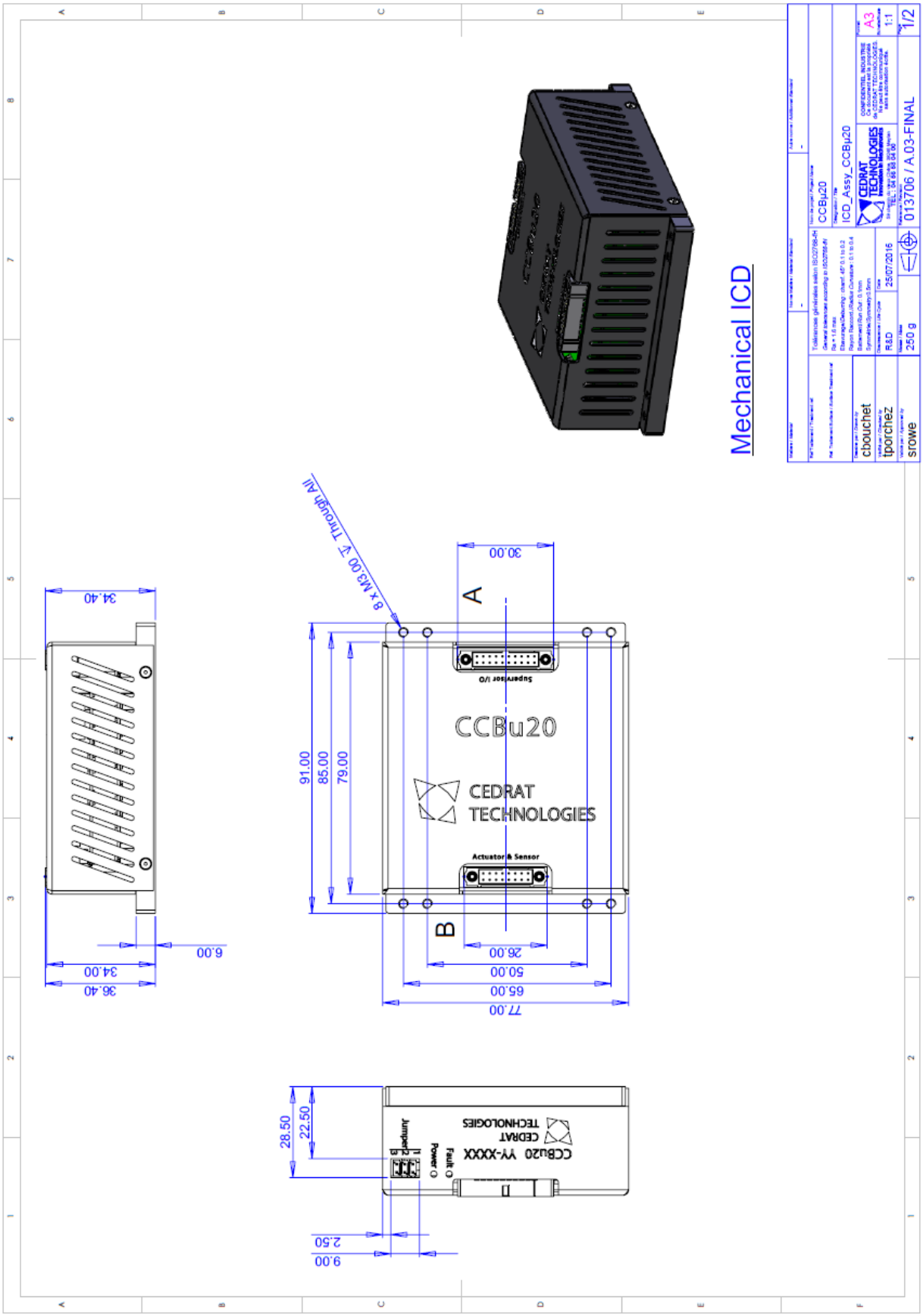
Mechanical ICD
CCBu20
CEDRAT TECHNOLOGIES
Supervisor I/O
Actuator & Sensor
8 x M3.00 ↧ Through All
A
B
30.00
91.00
85.00
79.00
26.00
50.00
65.00
77.00
34.40
36.40
34.00
6.00
28.50
22.50
9.00
2.50
Power
Fault
Jumpers
CCBu20 YY-XXXX
CEDRAT TECHNOLOGIES
ICD_Assy_CCBu20
cbouchet
tporchez
srowe
R&D
25/07/2016
250 g
013706 / A.03-FINAL
A3
1:1
1/2

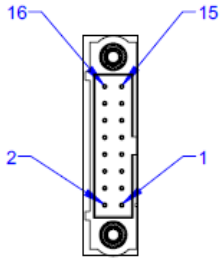

DÉTAIL B
ECHELLE 2 : 1

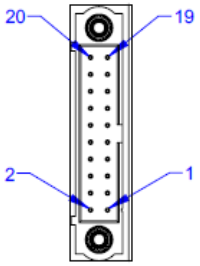

DÉTAIL A
ECHELLE 2 : 1

Actuator & Sensor Connector : HARWIN M80-5101642
to be connect with : HARWIN M80-4611642
HARWIN M80-4811642

Interface I/O Connector : HARWIN M80-5102042
to be connect with : HARWIN M80-4612042
HARWIN M80-4812042

Standard pinout table

Signal	Description	Comment	Pin N°
+130V	+130V rail for the push-pull configuration		13
PGND	Power ground	Power signal, current return from the actuators	9, 10, 11, 12, 14
VX	X axis voltage output	This voltage is varying, and controls the displacement on the X axis	15
VY	Y axis voltage output	This voltage is varying, and controls the displacement on the Y axis	16
1WIRE	1-wire bus for EEPROM memory	Optional: can be connected to a DS2431 EEPROM located on the mechanism.	7
T°C	Temperature signal from the integrated temperature probe	Optional: can be connected to a PT1000 temperature probe located on the mechanism.	8
SGY+	Positive middle node for the Y axis SG bridge	Voltage increases when the displacement on the Y axis increases.	5
SGY-	Negative middle node for the Y axis SG bridge	Voltage decreases when the displacement on the Y axis increases.	6
SGX+	Positive middle node for the X axis SG bridge	Voltage increases when the displacement on the X axis increases.	3
SGX-	Negative middle node for the X axis SG bridge	Voltage decreases when the displacement on the X axis increases.	4
VREF	+5V voltage reference for supplying the two SG bridges	This voltage supplies two full SG bridges of 350Ω. Max current is 30mA.	1
AGND	Analog ground, return for the low power signals	This is the reference for all the low power signals, both sensors and memory	2

Table 3-1: Connection to the mechanism, with integrated SG conditioning

Pin out table with external +/-10V sensor signal option

Signal	Description	Comment	Pin N°
+130V	+130V rail for the push-pull configuration		13
PGND	Power ground	Power signal, current return from the actuators	9, 10, 11, 12, 14
VX	X axis voltage output	This voltage is varying, and controls the displacement on the X axis	15
VY	Y axis voltage output	This voltage is varying, and controls the displacement on the Y axis	16
1WIRE	1-wire bus for EEPROM memory	Optional: can be connected to a DS2431 EEPROM located on the mechanism.	7
T°C	Temperature signal from the integrated temperature probe	Optional: can be connected to a PT1000 temperature probe located on the mechanism.	8
+15V	+15V power supply	Max current is 20mA.	5
-15V	-15V power supply	Max current is 20mA.	6
SY	Sensor input related to the Y axis	±10V range	3
SX	Sensor input related to the X axis	±10V range	4
VREF	+5V voltage reference	Max current is 30mA.	1
AGND	Analog ground, return for the low power signals	This is the reference for all the low power signals, both sensors and memory	2

Table 3-2: Connection to the mechanism, with ±10V sensor input option

Signal	Description	Comment	Pin N°
Vdc	CCBu20 power supply	+12V - +28V range, with maximum 1A continuous capability. Referenced to GND.	1,2
GND	CCBu20 ground	Reference of the CCBu20. **Connected to mechanical ground.**	3,4
RX+	Positive Receive RS422 signal	Digital input. Referenced to GND	5
RX-	Negative Receive RS422 signal	Digital input. Referenced to GND	6
TX+	Positive Transmit RS422 signal	Digital output. Referenced to GND	7
TX-	Negative Transmit RS422 signal	Digital output. Referenced to GND	8
Reserved		Do not connect	9
Reserved		Do not connect	10
Reserved		Do not connect	11
Reserved		Do not connect	12
Enable	Digital enable input	0-3.3 V input. Referenced to GND	13
Fault	Digital fault output	0-3.3V output. Referenced to GND	14
AGND	Analog ground	Reference for analog I/Os	15
T°C	Mechanism analog temperature output	0-3.3V output. Only valid if PT1000 is used on the mechanism. Referenced to AGND	16
AIX	Analog order input for X axis	±10V input. Referenced to AGND	17
AIY	Analog order input for Y axis	±10V input. Referenced to AGND	18
SX	Analog sensor output for X axis	±10V output. Referenced to AGND	19
SY	Analog sensor output for Y axis	±10V output. Referenced to AGND	20

Table 3-3: Connection with the supervisor

Electrical ICD

Matière / Material	Norme Matière / Material Standard: -	Autre norme / Additional Standard: -
Ref Traitement / Treatment ref Ref. Traitement Surface / Surface Treatment ref	Tolérances générales selon ISO2768-fH General tolerances according to ISO2768-fH Ra = 1.6 max Ebavurage/Deburring : chanf. 45° 0.1 to 0.2 Rayon Raccord./Radius Curvature : 0.1 to 0.4 Battement/Run Out : 0.1mm Symmétrie/Symmetry:0.5mm	Nom de projet / Project Name: CCBµ20 Désignation / Title: ICD_Assy_CCBµ20
Dessiné par / Drawn by: cbouchet		CEDRAT TECHNOLOGIES Innovation in Mechatronics 54 chemin du Vieux Chêne 38246 Meylan TEL : 04 56 58 04 00
Vérifié par / Checked by: tporchez	Dessiné le / Date: R&D 25/07/2016	CONFIDENTIEL INDUSTRIE Ce document est la propriété de CEDRAT TECHNOLOGIES. Il ne peut être communiqué sans autorisation écrite.
Validé par / Approved by: srowe	Masse / Mass: 250 g	Référence / Reference: 013706 / A.03-FINAL
		Format: A3 Echelle/Scale: 1:1 Page: 2/2